Enclosed Switch

D4C

CSM_D4C_DS_E_11_9

Compact Limit Switch That's Also Thin and Highly Sealed

- Approved by EN, UL, CSA, and CCC (Chinese standard). (Ask your OMRON representative for information on approved models.)
- Sealing characteristics that meet IEC IP67 degree of protection.
- Triple-sealed construction:
  Plunger section sealed via nitrile rubber packing seal and diaphragm; switch section sealed via nitrile rubber cap; cable entrance sealed via encapsulating material.
- Cable lengths of 3 and 5 m available on standard models. Models also available with UL and CSA-certified cables.
- Multiple mounting possible with Switches with Plungers.
- Models with red LED indicators added to series for easy confirmation of operation.
  (Set by default to light for non-operation.)
- VCTF oil-resistant cables with CE marking.
  (Applicable only to standard models.)

For the most recent information on models that have been certified for safety standards, refer to your OMRON website.

Be sure to read *Safety Precautions* on page 13 to 14 and *Safety Precautions for All Limit Switches*.

Model Number Structure

Model Number Legend (Not all combinations are possible. Ask your OMRON representative for details.)

Standard Models

D4C-□□□
(1)(2)(3)

(1) Rated Current

1: 5 A at 250 VAC, 4 A at 30 VDC
2: 5 A at 125 VAC (with LED indicator)
3: 4 A 30 VDC (with LED indicator)
4: 0.1 A at 125 VAC, 0.1 A at 30 VDC
5: 0.1 A at 125 VAC (with LED indicator)
6: 0.1 A at 30 VDC (with LED indicator)

(2) Cable Specifications

2: VCTF oil-resistant cable (3 m)
3: VCTF oil-resistant cable (5 m)
4: VCTF (3 m)
5: VCTF (5 m)
6: SJT(O) (3 m)
7: SJT(O) (5 m)

(3) Actuator

01: Pin plunger
02: Roller plunger
03: Crossroller plunger
20: Roller lever
24: Roller lever (high-sensitivity model)
31: Sealed pin plunger
32: Sealed roller plunger
33: Sealed crossroller plunger
50: Plastic rod
60: Center roller lever

Pre-wired Models

D4C-□0□□-□□□□□□
(1) (2) (3) (4)

(1) Rated Current

1: 1 A at 125 VAC, 1 A at 30 VDC
(Without operation indicator)
2: 1 A at 125 VAC (with operation indicator)
3: 1 A at 30 VDC (with operation indicator)

(2) Actuator

01: Pin plunger
02: Roller plunger
31: Sealed plunger
32: Sealed roller plunger
24: Roller lever (high-sensitivity model)

(3) Wiring Specifications

DK1EJ: Pre-wired models
(3 conductors: DC specification)
AK1EJ: Pre-wired models
(3 conductors: AC specification)
M1J: Connector models for ASI devices
(2 conductors: NO wiring)

(4) Cable length

03: 0.3 m

Wiring Specifications

Internal switch	Connector
COM	3
NC	2
NO	4

Weather-resistant Models

D4C-□□□-P
(1)(2)(3) (4)

(1) Rated Current

1: 5 A at 250 VAC, 4 A at 30 VDC
2: 5 A at 125 VAC (with LED indicator)
3: 4 A at 30 VDC (with LED indicator)
4: 0.1 A at 125 VAC, 0.1 A at 30 VDC

(2) Cable Specifications

2: VCTF oil-resistant cable (3 m)
3: VCTF oil-resistant cable (5 m)

(3) Actuator

20: Roller lever
24: Roller lever (high-sensitivity model)
27: Adjustable roller lever
29: Adjustable rod lever

(4) Structure

P: Weather-resistant

Ordering Information

Switches

Standard Switches with No Operation Indicator

Actuator	Ratings / Cable / Cable length (m)	Standard load			Microload	
		5 A at 250 VAC, 4 A at 30 VDC			0.1 A at 125 VAC, 0.1 A at 30 VDC	
		VCTF oil-resistant cable *1	VCTF cable *2	SJT(O) cable *3	VCTF oil-resistant cable *1	VCTF cable *2
		Model				
Pin plunger	3	**D4C-1201**	**D4C-1401**	**D4C-1601**	**D4C-4201**	**D4C-4401**
	5	**D4C-1301**	**D4C-1501**	**D4C-1701**	**D4C-4301**	**D4C-4501**
Roller plunger	3	**D4C-1202**	**D4C-1402**	**D4C-1602**	**D4C-4202**	**D4C-4402**
	5	**D4C-1302**	**D4C-1502**	**D4C-1702**	**D4C-4302**	**D4C-4502**
Crossroller plunger	3	**D4C-1203**	**D4C-1403**	**D4C-1603**	**D4C-4203**	**D4C-4403**
	5	**D4C-1303**	**D4C-1503**	**D4C-1703**	**D4C-4303**	**D4C-4503**
Roller lever	3	**D4C-1220**	**D4C-1420**	**D4C-1620**	**D4C-4220**	**D4C-4420**
	5	**D4C-1320**	**D4C-1520**	**D4C-1720**	**D4C-4320**	**D4C-4520**
Roller lever, high-sensitivity	3	**D4C-1224**	**D4C-1424**	**D4C-1624**	**D4C-4224**	**D4C-4424**
	5	**D4C-1324**	**D4C-1524**	**D4C-1724**	**D4C-4324**	**D4C-4524**
Sealed pin plunger	3	**D4C-1231**	**D4C-1431**	**D4C-1631**	**D4C-4231**	**D4C-4431**
	5	**D4C-1331**	**D4C-1531**	**D4C-1731**	**D4C-4331**	**D4C-4531**
Sealed roller plunger	3	**D4C-1232**	**D4C-1432**	**D4C-1632**	**D4C-4232**	**D4C-4432**
	5	**D4C-1332**	**D4C-1532**	**D4C-1732**	**D4C-4332**	**D4C-4532**
Sealed crossroller plunger	3	**D4C-1233**	**D4C-1433**	**D4C-1633**	**D4C-4233**	**D4C-4433**
	5	**D4C-1333**	**D4C-1533**	**D4C-1733**	**D4C-4333**	**D4C-4533**
Plastic rod	3	**D4C-1250**	**D4C-1450**	**D4C-1650**	**D4C-4250**	**D4C-4450**
	5	**D4C-1350**	**D4C-1550**	**D4C-1750**	**D4C-4350**	**D4C-4550**
Center roller lever	3	**D4C-1260**	**D4C-1460**	**D4C-1660**	**D4C-4260**	**D4C-4460**
	5	**D4C-1360**	**D4C-1560**	---	**D4C-4360**	**D4C-4560**

Note: 1. Models are available separately with resistance to viscous oils (oil drain holes are provided), but only with Plunger Models. Add "-M" to the model number (example: D4C-1202 would be D4C-1202-M). Ask your nearest OMRON representative for details.
2. Switches with variable roller levers are also available. Ask your nearest OMRON representative for details.

*1. Oil-resistant vinyl cabtire cables; approved by EN and IEC.
*2. Ordinary vinyl cabtire cables.
*3. Switches with SJT(O) Cables (cables approved by UL and CSA) are approved by UL and CSA.

Standard Switches with Operation Indicator (Red)

Actuator	Ratings / Cable / Cable length (m)	5 A at 125 VAC		4 A at 30 VDC	
		VCTF oil-resistant cable *1	VCTF cable *2	VCTF oil-resistant cable *1	VCTF cable *2
		Model			
Pin plunger	3	**D4C-2201**	**D4C-2401**	**D4C-3201**	**D4C-3401**
	5	**D4C-2301**	**D4C-2501**	**D4C-3301**	**D4C-3501**
Roller plunger	3	**D4C-2202**	**D4C-2402**	**D4C-3202**	**D4C-3402**
	5	**D4C-2302**	**D4C-2502**	**D4C-3302**	**D4C-3502**
Crossroller plunger	3	**D4C-2203**	**D4C-2403**	**D4C-3203**	**D4C-3403**
	5	**D4C-2303**	**D4C-2503**	**D4C-3303**	**D4C-3503**
Roller lever	3	**D4C-2220**	**D4C-2420**	**D4C-3220**	**D4C-3420**
	5	**D4C-2320**	**D4C-2520**	**D4C-3320**	**D4C-3520**
Roller lever, high-sensitivity	3	**D4C-2224**	**D4C-2424**	**D4C-3224**	**D4C-3424**
	5	**D4C-2324**	**D4C-2524**	**D4C-3324**	**D4C-3524**
Sealed pin plunger	3	**D4C-2231**	**D4C-2431**	**D4C-3231**	**D4C-3431**
	5	**D4C-2331**	**D4C-2531**	**D4C-3331**	**D4C-3531**
Sealed roller plunger	3	**D4C-2232**	**D4C-2432**	**D4C-3232**	**D4C-3432**
	5	**D4C-2332**	**D4C-2532**	**D4C-3332**	**D4C-3532**
Sealed crossroller plunger	3	**D4C-2233**	**D4C-2433**	**D4C-3233**	**D4C-3433**
	5	**D4C-2333**	**D4C-2533**	**D4C-3333**	**D4C-3533**
Plastic rod	3	**D4C-2250**	**D4C-2450**	**D4C-3250**	**D4C-3450**
	5	**D4C-2350**	**D4C-2550**	**D4C-3350**	**D4C-3550**
Center roller lever	3	**D4C-2260**	**D4C-2460**	**D4C-3260**	**D4C-3460**
	5	**D4C-2360**	**D4C-2560**	**D4C-3360**	**D4C-3560**

Note: Ask your nearest OMRON representative for information on Switching with approved international standards.
*1. Oil-resistant vinyl cabtire cables; approved by EN and IEC.
*2. Ordinary vinyl cabtire cables.

Standard Switches with Operation Indicator

Actuator	Ratings / Cable length (m)	0.1 A at 125 VAC, VCTF oil-resistant cable*	0.1 A at 30 VDC, VCTF oil-resistant cable*
		Model	
Pin plunger	3	**D4C-5201**	**D4C-6201**
	5	---	**D4C-6301**
Roller plunger	3	**D4C-5202**	**D4C-6202**
	5	**D4C-5302**	**D4C-6302**
Crossroller plunger	3	**D4C-5203**	**D4C-6203**
	5	**D4C-5303**	**D4C-6303**
Roller lever	3	**D4C-5220**	**D4C-6220**
	5	**D4C-5320**	**D4C-6320**
Roller lever, high-sensitivity	3	**D4C-5224**	**D4C-6224**
	5	**D4C-5324**	**D4C-6324**
Sealed pin plunger	3	---	**D4C-6231**
	5	---	**D4C-6331**
Sealed roller plunger	3	**D4C-5232**	**D4C-6232**
	5	**D4C-5332**	**D4C-6332**
Sealed crossroller plunger	3	---	**D4C-6233**
	5	---	**D4C-6333**
Plastic rod	3	**D4C-5250**	**D4C-6250**
	5	**D4C-5350**	**D4C-6350**

Note: Ask your nearest OMRON representative for information on Switching with approved international standards.
* Oil-resistant vinyl cabtire cables; approved by EN and IEC.

Pre-wired Models (Use VCTF Oil-resistant Cable)

Actuator	Ratings / Operation indicator / Cable length (m)	1 A at 125 VAC, Without operation indicator	1 A at 125 VAC, With operation indicator	1 A at 30 VDC, Without operation indicator	1 A at 30 VDC, With operation indicator
		Model			
Pin plunger	0.3	---	---	---	**D4C-3001-DK1EJ03**
Roller plunger	0.3	---	**D4C-2002-AK1EJ03**	**D4C-1002-DK1EJ03**	**D4C-3002-DK1EJ03**
Sealed roller plunger	0.3	---	---	**D4C-1032-DK1EJ03**	**D4C-3032-DK1EJ03**
Roller lever (high-sensitivity model)	0.3	---	**D4C-2024-AK1EJ03**	---	**D4C-3024-DK1EJ03**

Note: 1. M1J models are also available. Contact your OMRON sales representative for further information.
2. Of the above model numbers, some with special specifications are not registered.

Weather-resistant Models

Actuator	Operation indicator / Ratings / Cable length (m)	Without operating indication, Standard load: 5 A at 250 VAC, 4 A at 30 VDC	Without operating indication, Microload: 0.1 A at 125 VAC, 0.1 A at 30 VDC	With operating indication, Standard load: 5 A at 125 VAC	With operating indication, Standard load: 4 A at 30 VDC
		VCTF oil-resistant cable*			
		Model			
Roller lever	3	**D4C-1220-P**	**D4C-4220-P**	**D4C-2220-P**	**D4C-3220-P**
	5	**D4C-1320-P**	---	---	---
Roller lever (high-sensitivity model)	3	**D4C-1224-P**	**D4C-4224-P**	**D4C-2224-P**	**D4C-3224-P**
	5	**D4C-1324-P**	**D4C-4324-P**	**D4C-2324-P**	**D4C-3324-P**
Adjustable roller lever	3	**D4C-1227-P**	**D4C-4227-P**	**D4C-2227-P**	**D4C-3227-P**
	5	**D4C-1327-P**	**D4C-4327-P**	**D4C-2327-P**	**D4C-3327-P**
Adjustable rod lever	3	**D4C-1229-P**	**D4C-4229-P**	---	**D4C-3229-P**
	5	**D4C-1329-P**	---	**D4C-2329-P**	**D4C-3329-P**

* Vinyl cabtire cable with excellent oil resistance.
Note: Silicon rubber is used to increase resistance to the environment. Silicon rubber, however, can generate silicon gas. (This can occur at room temperature, but the amount of silicon gas generated increases at higher temperatures.) Silicon gas will react as a result of arc energy and form silicon oxide (SiO_2). If silicon oxide accumulates on the contacts, contact interference can occur and can interfere with the device. Before using a Switch, test it under actual application conditions (including the environment and operating frequency) to confirm that no problems will occur in actual.

Applicable Cables

Appearance	No. of conductors	Type: Cable length	For AC: Model	For DC: Model
Straight 	4	2 m	**XS2F-A421-D90-F**	**XS2F-D421-D80-F**
		5 m	**XS2F-A421-G90-F**	**XS2F-D421-G80-F**

Mounting Plates (Order Separately)

The WL/WL-N model incorporated by equipment can be replaced with the D4C together with the Mounting Plate without changing the position of the dog or cam.

List of Replaceable Models

WL/WL-N model (Actuator)	D4C model (Actuator)	Plate
WLD/WL01D/WLD18-N (Top plunger)	➡ D4C-□□01 (Plunger)	**D4C-P001**
WLD2/WL01D2/WLD28-N (Top roller plunger)	➡ D4C-□□02 (Roller plunger)	**D4C-P002**
WLCA2/WL01CA2/WLCA2-N (Roller lever)	➡ D4C-□□20 (Roller lever)	**D4C-P020**

Note: The WL01□ is for micro loads.

Example of Replacement

Note: The position of the dog remains unchanged.

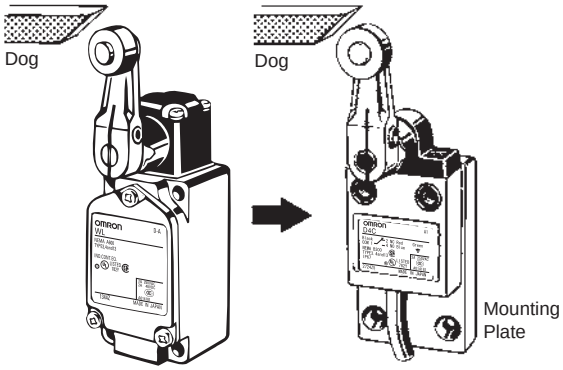

Individual Parts

Head/Actuator

Actuator	Head (with actuator)	Actuator
Pin plunger	**D4C-0001**	---
Roller plunger	**D4C-0002**	---
Crossroller plunger	**D4C-0003**	---
Roller lever	**D4C-0020**	**WL-1A100**
Roller lever (weather-resistant model)	---	**WL-1A100P1**
Roller lever (high-sensitivity model)	**D4C-0024**	**WL-1A100**
Variable roller lever	**D4C-0027**	---
Variable rod lever	**D4C-0029**	**HL-1HPA500**
Sealed pin plunger	**D4C-0031**	---
Sealed roller plunger	**D4C-0032**	---
Sealed crossroller plunger	**D4C-0033**	---
Plastic rod	**D4C-0050**	---
Center roller lever	**D4C-0060**	---

Note: 1. The model numbers for heads are of the form D4C-00□□, with the numbers in the squares indicating the type of actuator.
2. Actuators for plunger models, plastic rod models, and center roller lever models cannot be ordered individually. They must be ordered together with the head.

Specifications

Approved Standards

Agency	Standard	File No.
TÜV Product Service	EN60947-5-1	*1, 3
UL	UL508	E76675 *2
CSA	CSA C22.2 No.14	LR45746 *2
CCC(CQC)	GB/T14048.5	*3

*1. Excluding weather-resistant models, only models with VCTF oil-resistant cables and pre-wired models are certified.
(Contact your OMRON representative for the model numbers.)
Models with VCTF oil-resistant cables and pre-wired models (125 VAC) are certified for CE Marking.
*2. SJT(O)-cable models only.
(Applicable only to models listed on pages 2 to 3.)
*3. Ask your OMRON representative for information on approved models.

Ratings

Standard Model

Rated voltage	Non-inductive load (A)				Inductive load (A)			
	Resistive load		Lamp load		Inductive load		Motor load	
	NC	NO	NC	NO	NC	NO	NC	NO
125 VAC	5 (0.1)		1.5	0.7	3		2.5	1.3
250 VAC	5		1	0.5	2		1.5	0.8
8 VDC	5 (0.1)		2		5	4	3	
14 VDC	5 (0.1)		2		4	4	3	
30 VDC	4 (0.1)		2		3	3	3	
125 VDC	0.4		0.05		0.4		0.05	
250 VDC	0.2		0.03		0.2		0.03	

Inrush current	NC	20 A max.
	NO	10 A max.

Note: 1. The values given on the top are steady-state currents.
2. Inductive loads have a power factor of 0.4 min. (AC) and a time constant of 7 ms max. (DC).
3. Lamp loads have an inrush current of 10 times the steady-state current.
4. Motor loads have an inrush current of 6 times the steady-state current.
5. The values "0.1" given in parentheses are for micro load models.

Pre-wired Model

Rated voltage	Non-inductive load (A)				Inductive load (A)			
	Resistive load		Lamp load		Inductive load		Motor load	
	NC	NO	NC	NO	NC	NO	NC	NO
125 VAC	1	1	1	0.7	1	1	1	1
30 VDC	1	1	1	1	1	1	1	1

Approved Standard Ratings

TÜV (EN60947-5-1), CCC (GB/T14048.5)

Model	Applicable category and ratings	I the
D4C-1□□□	AC-15 2 A/250 V DC-12 2 A/30 V	5 A 4 A
D4C-2□□□	AC-15 2 A/125 V	5 A
D4C-3□□□	DC-12 2 A/30 V	4 A
D4C-4□□□	AC-14 0.1 A/125 V DC-12 0.1 A/30 V	0.5 A 0.5 A
D4C-5□□□	AC-14 0.1 A/125 V	0.5 A
D4C-6□□□	DC-12 0.1 A/30 V	0.5 A

UL/CSA

B300 (D4C-16□□, -17□□)
B150 (D4C-26□□, -27□□)

B300

Rated voltage	Carry current	Current (A)		Volt-amperes (VA)	
		Make	Break	Make	Break
120 VAC	5 A	30	3	3,600	360
240 VAC		15	1.5	3,600	360

B150

Rated voltage	Carry current	Current (A)		Volt-amperes (VA)	
		Make	Break	Make	Break
120 VAC	5 A	30	3	3,600	360

Characteristics

Degree of protection *7		IP67 (EN60947-5-1)
Durability *1	Mechanical *3	10,000,000 operations min.
	Electrical *2	200,000 operations min. (5 A at 125 VAC, resistive load)
Operating speed		0.1 mm/s to 0.5 m/s (in case of plunger) 1 mm/s to 1 m/s (in case of roller lever)
Operating frequency	Mechanical	120 operations/min
	Electrical	30 operations/min
Rated frequency		50/60 Hz
Insulation resistance		100 MΩ min. (at 500 VDC)
Contact resistance (initial)		250 mΩ max. (initial value with 2-m VCTF cable) 300 mΩ max. (initial value with 3-m VCTF cable) 400 mΩ max. (initial value with 5-m VCTF cable)
Dielectric strength	Between terminals of the same polarity	1,000 VAC, 50/60 Hz for 1 min
	Between current-carrying metal part and ground	1,500 VAC, 50/60 Hz for 1 min Uimp: 2.5 kV (EN60947-5-1)
	Between each terminal and non-current-carrying metal part,	1,500 VAC, 50/60 Hz for 1 min Uimp: 2.5 kV(EN60947-5-1)
Rated insulation voltage (Ui)		300 V (EN60947-5-1) *5
Pollution degree (operating environment)		3 (EN60947-5-1)
Short-circuit protective device (SCPD)		10 A fuse type gI or gG (IEC60269)
Conditional short-circuit current		100 A (EN60947-5-1)
Conventional enclosed thermal current (I the)		5 A, 4 A, 0.5 A (EN60947-5-1)
Protection against electric shock		Class I (with grounding wire) *6
Vibration resistance	Malfunction	10 to 55 Hz, 1.5-mm double amplitude *4
Shock resistance	Destruction	1,000 m/s² max.
	Malfunction	500 m/s² max. *4
Ambient operating temperature		–10°C to +70°C (with no icing)
Ambient operating humidity		35% to 95%RH
Weight (D4C-1202)		With 3-m VCTF cable: 360 g With 5-m VCTF cable: 540 g

Note: The above figures are initial values.
*1. The values are calculated at an operating temperature of +5°C to +35°C, and an operating humidity of 40% to 70%RH. Contact your OMRON sales representative for more detailed information on other operating environments.
*2. Pre-wired Models: 1,000,000 operations min. (DC specifications, switching current: 0.1 A)
*3. Outdoor specifications: 500,000 operations min.
*4. Excluding Plastic Rods.
*5. Pre-wired models: 250 V
*6. Pre-wired models: class III
*7. The degree of protection is tested using the method specified by the standard (EN60947-5-1). Confirm that sealing properties are sufficient for the operating conditions and environment beforehand.

Engineering Data

Electrical Durability

D4C-1□□□, -2□□□, -3□□□

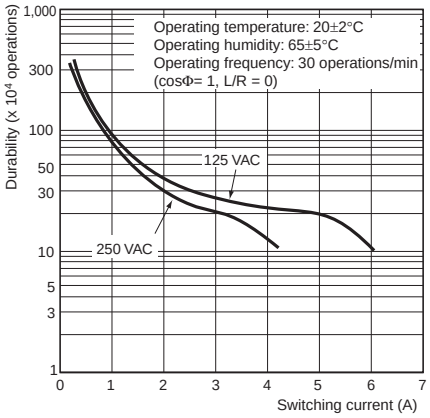

D4C-4□□□, -5□□□, -6□□□

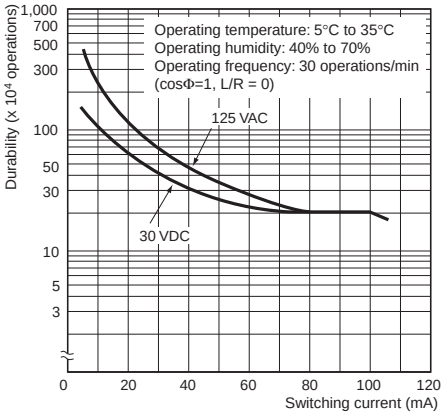

Leakage Current for LED-indicator Models

The leakage currents and resistances of LED-indicator models are given in the following table.

Model	Voltage	Leakage current	Resistance
D4C-2□□□	125 VAC	1.7 mA	68 kΩ
D4C-3□□□	30 VDC	1.7 mA	15 kΩ
D4C-5□□□	125 VAC	1.7 mA	68 kΩ
D4C-6□□□	30 VDC	1.7 mA	15 kΩ

Structure and Nomenclature

Structure

Standard Models

Roller Lever Models Without Indicator

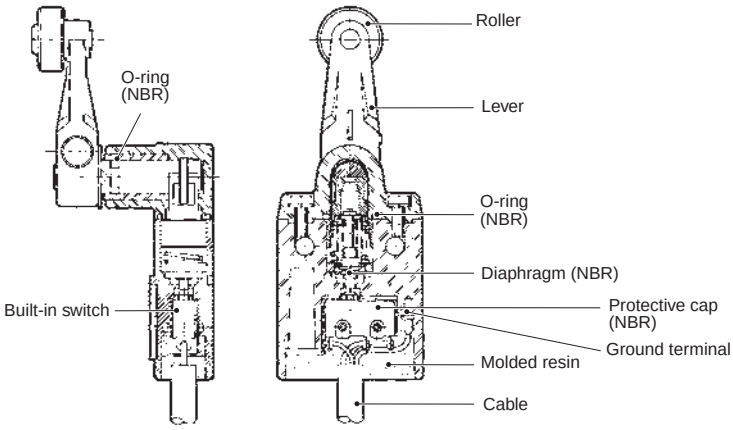

Weather-resistant Models

Roller Lever Models Without Indicator

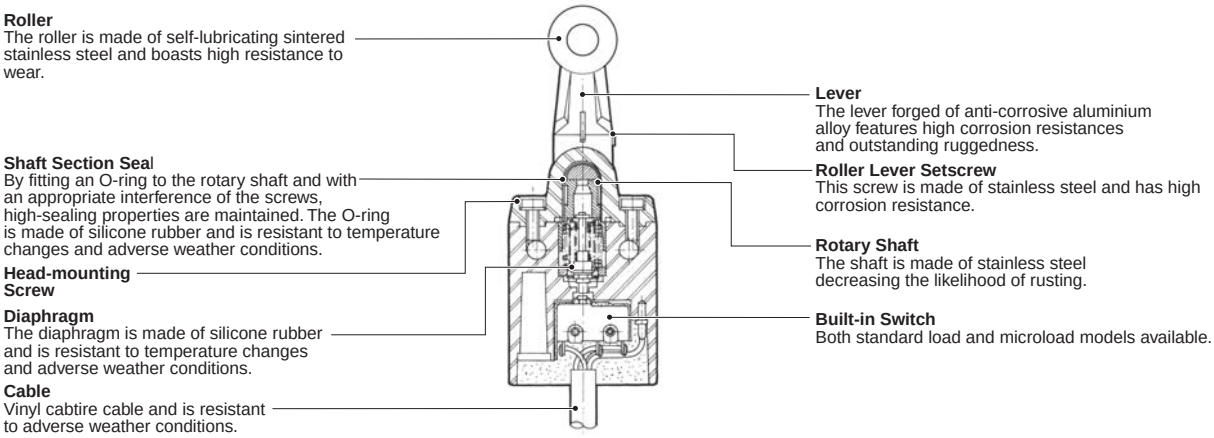

Contact Form

Standard Models/Weather-resistant Models

Without Operation Indicator

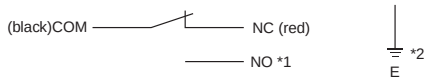

With Operation Indicator
(Lit when Not Actuated)
<24 VDC LED>

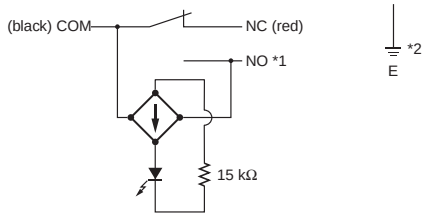

<100 VAC LED>

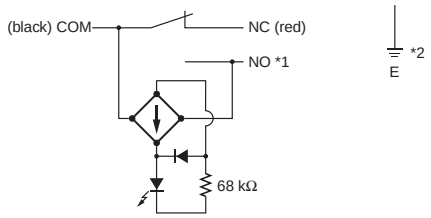

Connector Models for ASI Devices (-M1J)

Without Operation Indicator

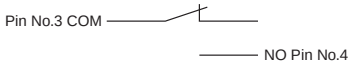

With Operation Indicator
(Lit when Not Actuated)

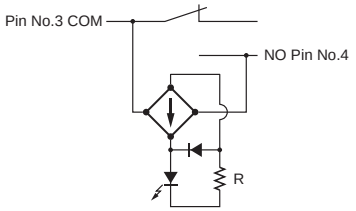

For DC

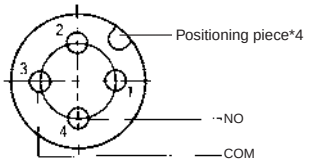

Pre-wired Models (-AK1EJ□, -DK1EJ□)

Without Operation Indicator

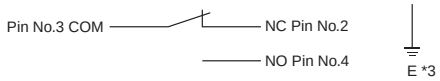

With Operation Indicator
(Lit when Not Actuated)
<24 VDC LED>

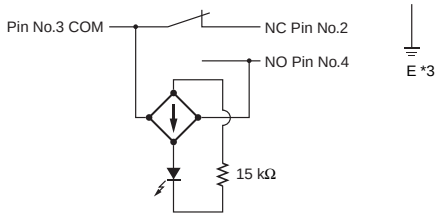

<100 VAC LED>

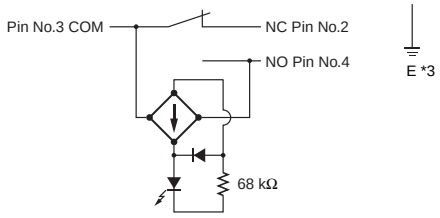

For AC

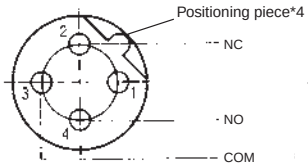

For DC

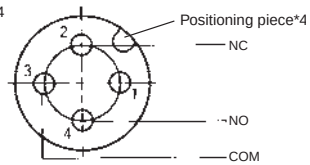

*1. NO (white): VCTF oil-resistant cable or VCTF cable.
NO (blue): SJT (O) cable approved by UL and CSA.
*2. E (yellow/green): VCTF oil-resistant cable.
E (green): VCTF cable or SJT (O) cable approved by UL and CSA.
*3. E (ground) is not grounded.
*4. The position of the positioning piece is not fixed. Using an L-shaped connector may result in failure. Use only a straight connector.

Note: 1. "Lit when not Actuated" means that when the actuator is in the free position, the indicator is lit, and when the actuator is turned or pushed and the contact comes into contact with the NO side, the indicator turns OFF.
2. Leakage current from indicator circuit may cause load's malfunction. Please check the load's OFF current before use the indicator-equipped switch.

Dimensions and Operating Characteristics

Switches

Standard Models

Models without LED indicators are shown in the illustrations and dimensions diagrams. Refer to page 11 for *Models with LED Indicators*. The boxes in the model numbers are replaced with the rating and cable type. Refer to page 1 for the *Model Number Structure*.

Pin Plunger

D4C-□□01

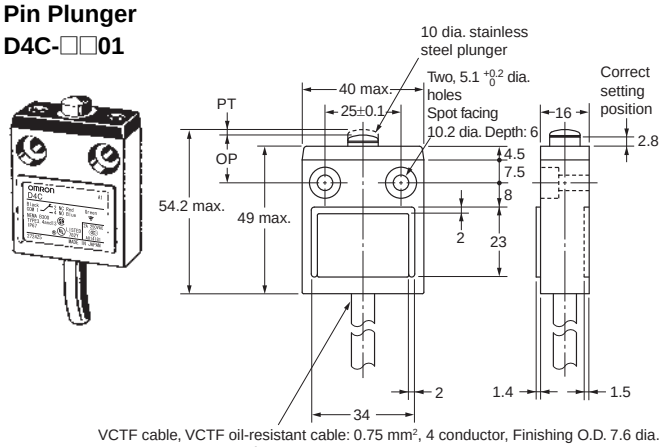

VCTF cable, VCTF oil-resistant cable: 0.75 mm², 4 conductor, Finishing O.D. 7.6 dia.
SJT(O) cable: 0.83 mm², 4 conductor, Finishing O.D. 8.6 dia.

Roller Plunger

D4C-□□02

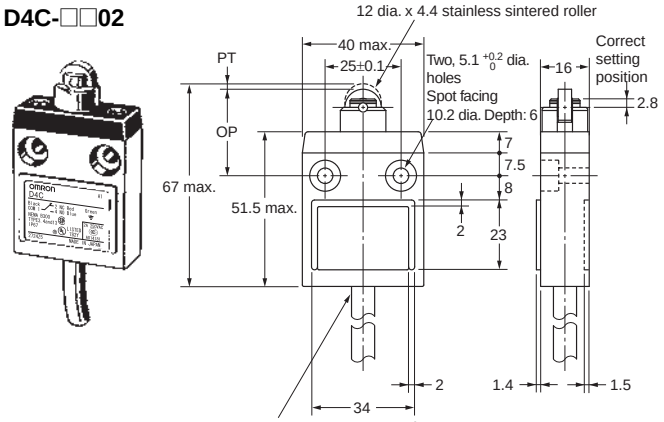

VCTF cable, VCTF oil-resistant cable: 0.75 mm², 4 conductor, Finishing O.D. 7.6 dia.
SJT(O) cable: 0.83 mm², 4 conductor, Finishing O.D. 8.6 dia.

Crossroller Plunger

D4C-□□03

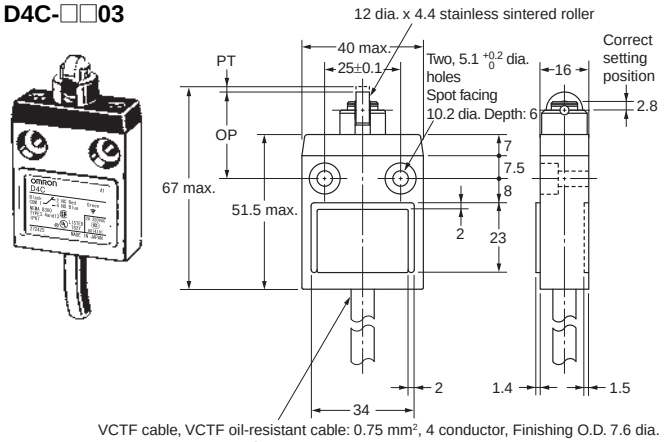

VCTF cable, VCTF oil-resistant cable: 0.75 mm², 4 conductor, Finishing O.D. 7.6 dia.
SJT(O) cable: 0.83 mm², 4 conductor, Finishing O.D. 8.6 dia.

Roller Lever

D4C-□□20
D4C-□□20-P

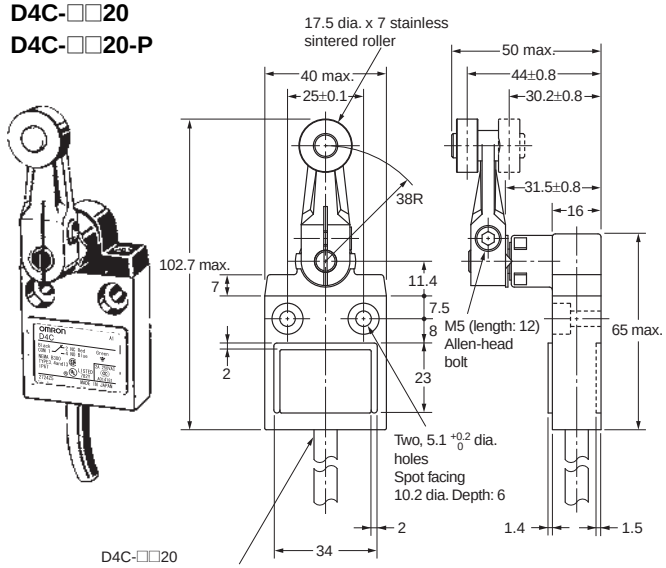

D4C-□□20
VCTF cable, VCTF oil-resistant cable: 0.75 mm², 4 conductor, Finishing O.D. 7.6 dia.
SJT(O) cable: 0.83 mm², 4 conductor, Finishing O.D. 8.6 dia.
D4C-□□20-P (Weather-resistant Models)
VCTF oil-resistant cable* : 0.75 mm², 4 conductor, Finishing O.D. 7.6 dia.
* VCTF oil-resistant cable only.

Roller Lever (High-Sensitivity Model)

D4C-□□24
D4C-□□24-P

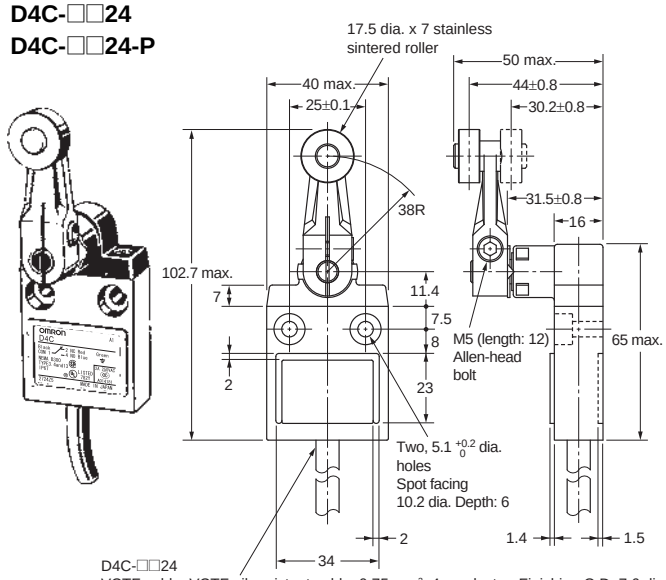

D4C-□□24
VCTF cable, VCTF oil-resistant cable: 0.75 mm², 4 conductor, Finishing O.D. 7.6 dia.
SJT(O) cable: 0.83 mm², 4 conductor, Finishing O.D. 8.6 dia.
D4C-□□24-P (Weather-resistant Models)
VCTF oil-resistant cable* : 0.75 mm², 4 conductor, Finishing O.D. 7.6 dia.
* VCTF oil-resistant cable only.

Note: Unless otherwise specified, a tolerance of ±0.4 mm applies to all dimensions.

Operating characteristics / Model			D4C-□□01	D4C-□□02	D4C-□□03	D4C-□□20 D4C-□□20-P	D4C-□□24 D4C-□□24-P
Operating force	OF	max.	11.77 N	11.77 N	11.77 N	5.69 N	5.69 N
Release force	RF	min.	4.41 N	4.41 N	4.41 N	1.47 N	1.47 N
Pretravel	PT	max.	1.8 mm	1.8 mm	1.8 mm	25°	10°±3°
Overtravel	OT	min.	3 mm	3 mm	3 mm	40°	50°
Movement Differential	MD	max.	0.2 mm	0.2 mm	0.2 mm	3°	3°
Operating Position	OP		15.7±1 mm	28.5±1 mm	28.5±1 mm	---	---

Sealed Plunger
D4C-□□31

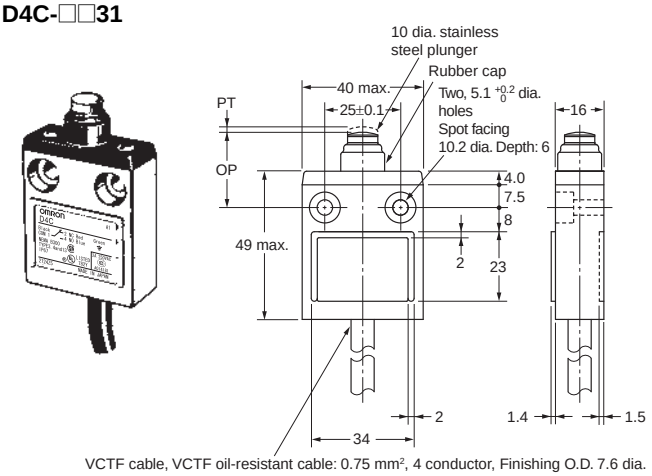

VCTF cable, VCTF oil-resistant cable: 0.75 mm², 4 conductor, Finishing O.D. 7.6 dia.
SJT(O) cable: 0.83 mm², 4 conductor, Finishing O.D. 8.6 dia.

Sealed Roller Plunger
D4C-□□32

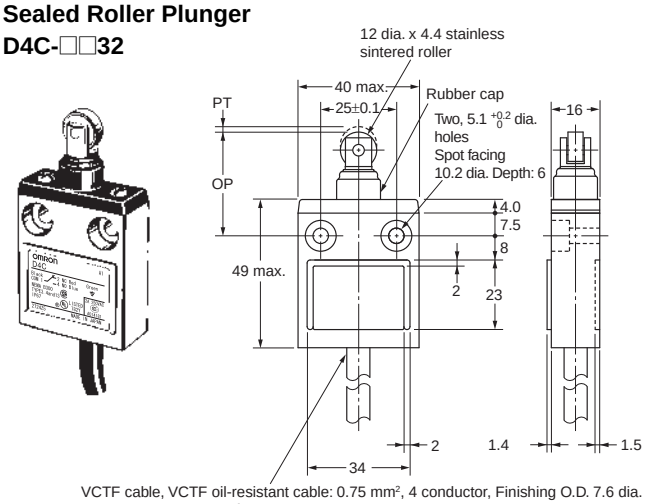

VCTF cable, VCTF oil-resistant cable: 0.75 mm², 4 conductor, Finishing O.D. 7.6 dia.
SJT(O) cable: 0.83 mm², 4 conductor, Finishing O.D. 8.6 dia.

Sealed Crossroller Plunger
D4C-□□33

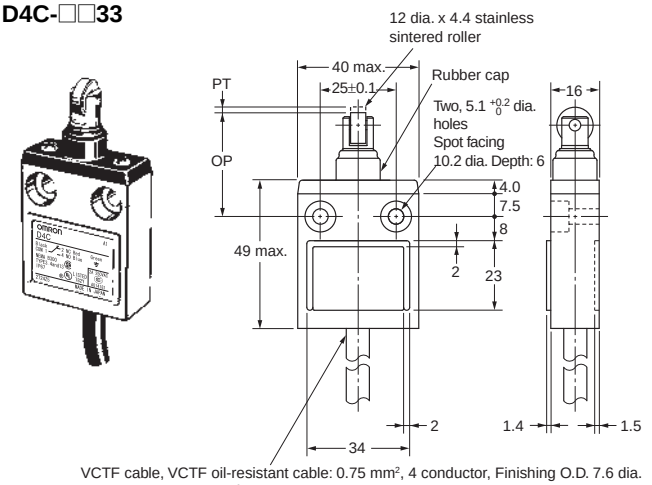

VCTF cable, VCTF oil-resistant cable: 0.75 mm², 4 conductor, Finishing O.D. 7.6 dia.
SJT(O) cable: 0.83 mm², 4 conductor, Finishing O.D. 8.6 dia.

Note: Unless otherwise specified, a tolerance of ±0.4 mm applies to all dimensions.

Operating characteristics		Model	D4C-□□31	D4C-□□32	D4C-□□33
Operating force	OF	max.	17.65 N	17.65 N	17.65 N
Release force	RF	min.	4.41 N	4.41 N	4.41 N
Pretravel	PT	max.	1.8 mm	1.8 mm	1.8 mm
Overtravel	OT	min.	3 mm	3 mm	3 mm
Movement Differential	MD	max.	0.2 mm	0.2 mm	0.2 mm
Operating Position	OP		24.9±1 mm	34.3±1 mm	34.3±1 mm
Total travel	TT *		(5) mm	(5) mm	(5) mm

* The TT is a reference value.

Plastic rod
D4C-□□50

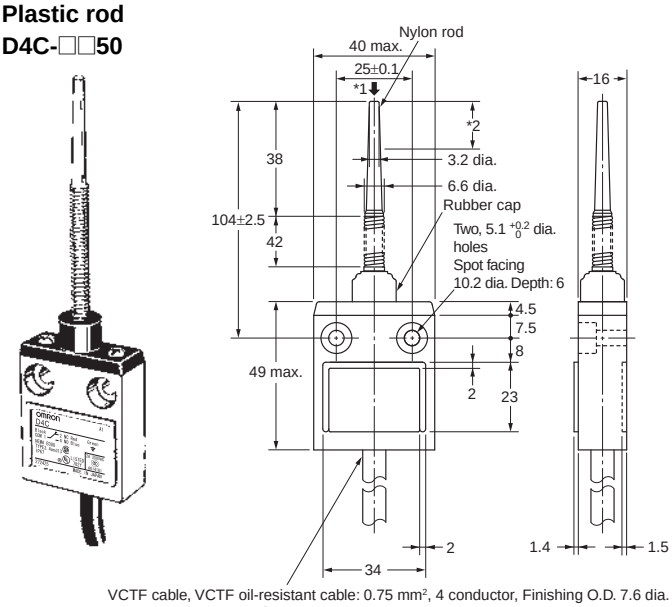

VCTF cable, VCTF oil-resistant cable: 0.75 mm², 4 conductor, Finishing O.D. 7.6 dia.
SJT(O) cable: 0.83 mm², 4 conductor, Finishing O.D. 8.6 dia.

*1 Operation is possible in any direction except in parallel to the axis.
*2 The ideal range for operation is between the tip of the rod and 1/3 of the length of the actuator.

Center Roller Lever Plunger
D4C-□□60

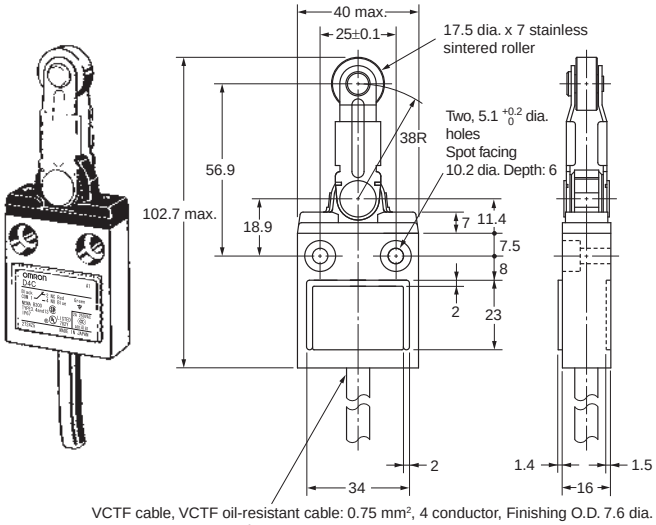

VCTF cable, VCTF oil-resistant cable: 0.75 mm², 4 conductor, Finishing O.D. 7.6 dia.
SJT(O) cable: 0.83 mm², 4 conductor, Finishing O.D. 8.6 dia.

Note: Unless otherwise specified, a tolerance of ±0.4 mm applies to all dimensions.

Operating characteristics		Model	D4C-□□50	D4C-□□60
Operating force	OF	max.	1.47 N	6.67 N
Release force	RF	min.	---	1.47 N
Pretravel	PT	max.	15°	10°±3°
Overtravel	OT	min.	---	50°
Movement Differential	MD	max.	---	3°
Operating Position	OP		---	---
Total travel	TT		---	---

Models with LED Indicator

The dimensions of the LED indicator for models equipped with one are shown below.

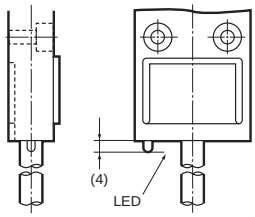

Pre-wired Models

Pin Plunger
D4C-□001-□K1EJ□
D4C-□001-M1J□

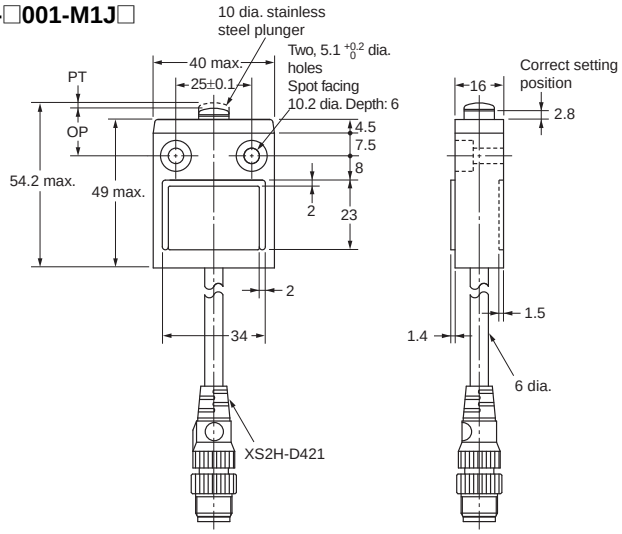

Roller Plunger
D4C-□002-□K1EJ□
D4C-□002-M1J□

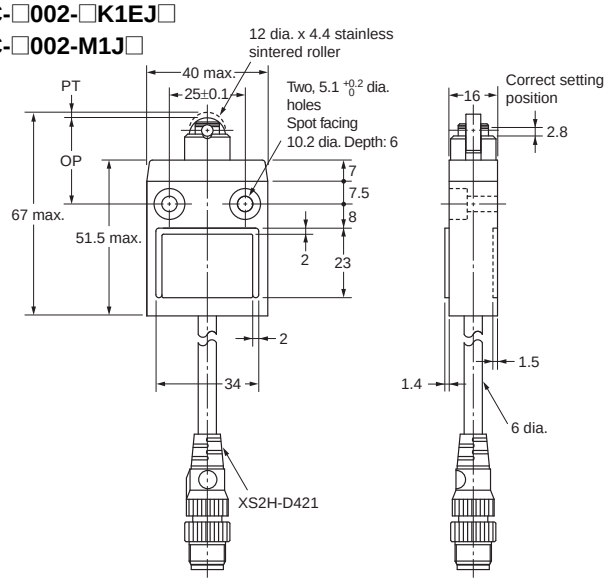

Note: Unless otherwise specified, a tolerance of ±0.4 mm applies to all dimensions.

Operating characteristics		Model	D4C-□001 -□K1EJ□	D4C-□002 -□K1EJ□
Operating force	OF	max.	11.77 N	11.77 N
Release force	RF	min.	4.41 N	4.41 N
Pretravel	PT	max.	1.8 mm	1.8 mm
Overtravel	OT	min.	3 mm	3 mm
Movement Differential	MD	max.	0.2 mm	0.2 mm
Operating Position	OP		15.7±1 mm	28.5±1 mm

Note: Specifications are the same for -M1J Switches.

Sealed Pin Plunger

D4C-□031-□K1EJ□

D4C-□031-M1J□

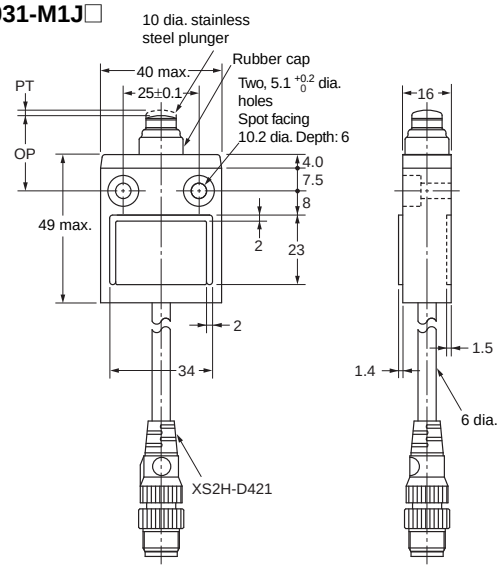

Sealed Roller Plunger

D4C-□032-□K1EJ□

D4C-□032-M1J□

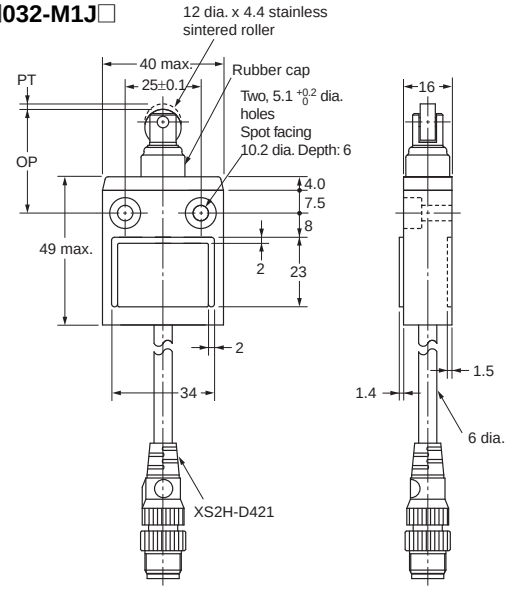

Note: Unless otherwise specified, a tolerance of ±0.4 mm applies to all dimensions.

Operating characteristics	Model		D4C-□031 -□K1EJ□	D4C-□032 -□K1EJ□
Operating force	OF	max.	17.65 N	17.65 N
Release force	RF	min.	4.41 N	4.41 N
Pretravel	PT	max.	1.8 mm	1.8 mm
Overtravel	OT	min.	3 mm	3 mm
Movement Differential	MD	max.	0.2 mm	0.2 mm
Operating Position	OP		24.9±1 mm	34.3±1 mm

Note: Specifications are the same for -M1J Switches

Roller Lever (High-sensitivity Model)

D4C-□024-□K1EJ□

D4C-□024-M1J□

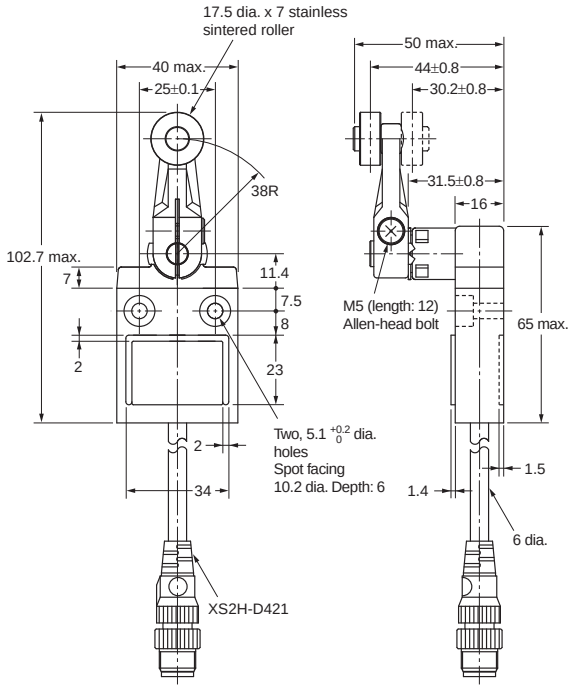

Note: Unless otherwise specified, a tolerance of ±0.4 mm applies to all dimensions.

Operating characteristics	Model		D4C-□024-□K1EJ□
Operating force	OF	max.	5.69 N
Release force	RF	min.	1.47 N
Pretravel	PT		10°±3°
Overtravel	OT	min.	50°
Movement Differential	MD	max.	3°
Operating Position	OP		---

Note: Specifications are the same for -M1J Switches

Weather-resistant Models

Adjustable Roller Lever
D4C-□□27-P

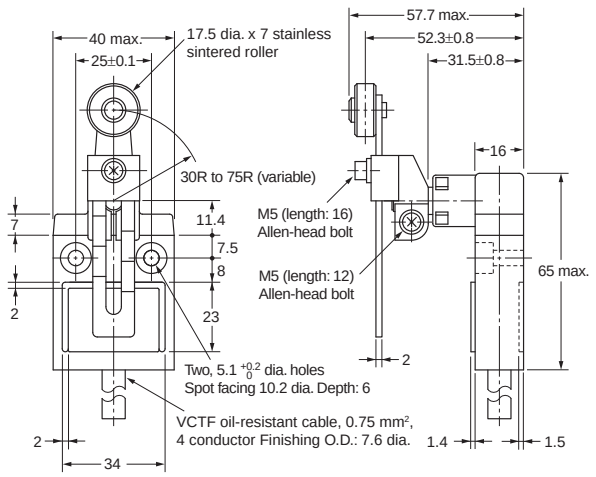

Adjustable Rod Lever
D4C-□□29-P

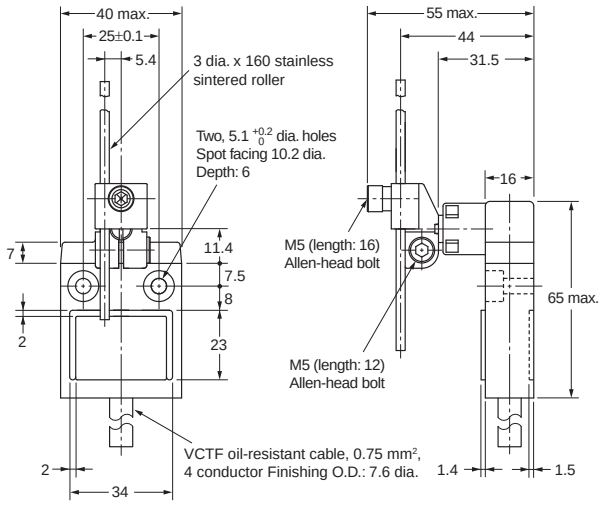

Note: Unless otherwise specified, a tolerance of ±0.4 mm applies to all dimensions.

Operating characteristics		Model	D4C-□□27-P	D4C-□□29-P *
Operating force	OF	max.	5.69 N	5.69 N
Release force	RF	min.	1.47 N	1.47 N
Pretravel	PT	max.	25°	25°
Overtravel	OT	min.	40°	40°
Movement Differential	MD	max.	3°	3°

* Operation characteristics for the D4C-□□27-P and D4C- □□29-P are for a lever length of 38 mm.

Safety Precautions

Refer to *Safety Precautions for All Limit Switches*.

Precautions for Correct Use

Operating Environment

- Seal material may deteriorate if a Switch is used outdoor or where subject to special cutting oils, solvents, or chemicals. Always appraise performance under actual application conditions and set suitable maintenance and replacement periods.
- Install Switches where they will not be directly subject to cutting chips, dust, or dirt. The Actuator and Switch must also be protected from the accumulation of cutting chips or sludge.

- Constantly subjecting a Switch to vibration or shock can result in wear, which can lead to contact interference with contacts, operation failure, reduced durability, and other problems. Excessive vibration or shock can lead to false contact operation or damage. Install Switches in locations not subject to shock and vibration and in orientations that will not produce resonance.
- If there are materials that contain silicon components or phosphorus components in the vicinity of where the Switch is being used, these components may be converted into gas due to the type of the material or the operating temperature or humidity, resulting in inadequate conductivity.
  Examples of sources of silicon and phosphorous gas are shown below. Refer to these examples and implement countermeasures.

Examples of silicon gas sources
Sources
Silicon-based coating agents, silicon-based adhesives, silicon rubber, silicon oil/grease, silicon-based mold release agents, silicon filling agents, silicone power cables

Countermeasure details:
When a source of silicon gas exists, you are asked to suppress arcing with contact protective circuits, to remove this source from the vicinity of the Switch, or to change to a different material. Also, if you cannot avoid using the Switch in an environment where a source of silicon gas is present, check the Switch in the actual environment where it will be used and periodically inspect and replace the Switch.

Examples of phosphorus compound gas sources
Sources
Heat-shrinking tubes, lead wires, connectors, resin materials including red phosphorus, oil, industrial waste, decaying materials (garbage), seawater, insecticides, smoking materials, chemicals

Countermeasure details:
When a source of phosphorus compound gas exists, you are asked to remove this source from the vicinity of the Switch or to change to a different material. Also, if you cannot avoid using the Switch in an environment where a material including phosphorus (ammonium dihydrogen phosphate-based) components is present, check the Switch in the actual environment where it will be used and periodically inspect and replace the Switch.

Handling

The bottom of the Switch at the cable outlet is resin-molded. Secure the cable at a point 5 cm from the Switch bottom to prevent exertion of excess force on the cable.
When bending the cable, provide a bending radius of 45 mm min. so as not to damage the cable insulation or sheath. Excessive bending may cause fire or leakage current.

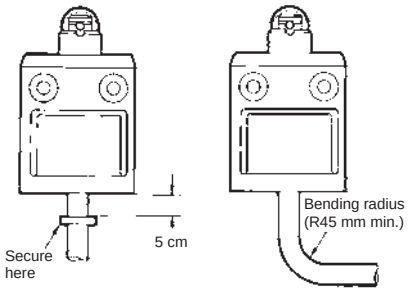

Connections

- Be sure to connect a fuse with a breaking current 1.5 to 2 times larger than the rated current to the Limit Switch in series in order to protect the Limit Switch from damage due to short-circuiting.
- When using the Limit Switch for the EN ratings, use the gI or gG 10-A fuse.

Operation

- Operation method, shapes of cam and dog, operating frequency, and overtravel have a significant effect on the service life and precision of a Limit Switch. For this reason, the dog angle must be 30° max., the surface roughness of the dog must be 6.3 S min. and hardness must be Hv 400 to 500.
- To allow the plunger-type actuator to travel properly, adjust the dog and cam to the proper setting positions. The proper position is where the plunger groove fits the bushing top.

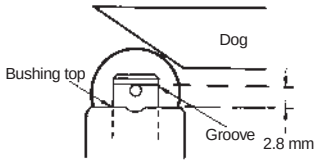

- To allow the roller lever-type actuator to travel properly, adjust the dog and cam so that the arrow head is positioned between the two convex markers as shown below.

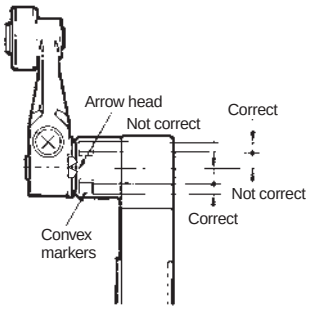

Indicator

- Indicator-equipped switch has contacts and indicator in parallel. When contacts are open, leakage current flows through the indicator circuit and may cause load's malfunction.
  Please check the load's OFF current before use the indicator-equipped switch.

Mounting

- A maximum of 6 Switches may be group-mounted. In this case, pay attention to the mounting direction so that the convex part of the group-mounting guide on one Switch fits into the concave part of the guide on the other Switch as shown in the figure below. For group mounting, the mounting panel must have a thickness (t) of 6 mm min.

Group Mounting

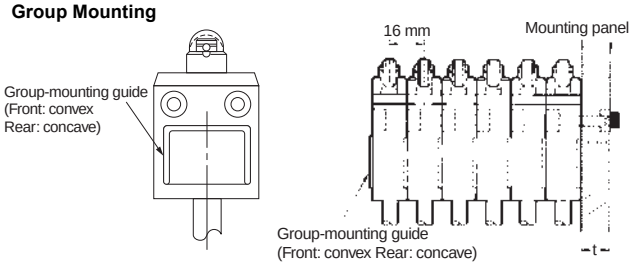

- If the mounting panel is warped or has protruding parts, a malfunction may result. Make sure that the mounting panel is not warped and has even surfaces.

Mounting Holes

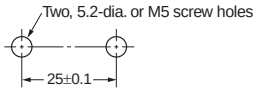

- Use a Switch with a rubber cap when using the plunger type in an environment where malfunction is possible due to environmental conditions such as dust or cutting chips which may not allow resetting.
- Do not expose the Switch to water exceeding 70°C or use it in steam.
- When the D4C is used in a circuit of a device to be exported to Europe, classified as Overvoltage Class III as specified in IEC664, provide a contact protection circuit.
- Tighten each screw to a torque according to the following table.

No.	Type	Appropriate tightening torque*
1	M5 Allen-head bolt	4.90 to 5.88 N·m
2	M3.5 head mounting screw	0.78 to 0.88 N·m
3	M5 Allen-head bolt	4.90 to 5.88 N·m

* By removing the two screws from the head, the head direction can be rotated 180°. After changing the head direction, re-tighten to the torque specified above. Be careful not to allow any foreign substance to enter the Switch.

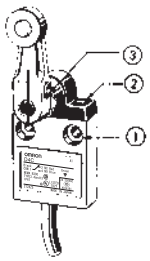

Micro-load Models (D4C-4, -5, -6)

Micro-load models can be used for switching in the range shown below.

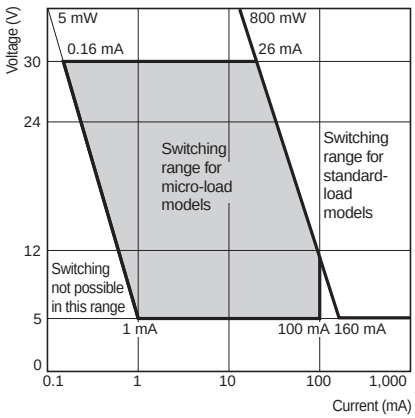

Terms and Conditions Agreement

Read and understand this catalog.
Please read and understand this catalog before purchasing the products. Please consult your OMRON representative if you have any questions or comments.

Warranties.
(a) Exclusive Warranty. Omron's exclusive warranty is that the Products will be free from defects in materials and workmanship for a period of twelve months from the date of sale by Omron (or such other period expressed in writing by Omron). Omron disclaims all other warranties, express or implied.
(b) Limitations. OMRON MAKES NO WARRANTY OR REPRESENTATION, EXPRESS OR IMPLIED, ABOUT NON-INFRINGEMENT, MERCHANTABILITY OR FITNESS FOR A PARTICULAR PURPOSE OF THE PRODUCTS. BUYER ACKNOWLEDGES THAT IT ALONE HAS DETERMINED THAT THE
PRODUCTS WILL SUITABLY MEET THE REQUIREMENTS OF THEIR INTENDED USE.
Omron further disclaims all warranties and responsibility of any type for claims or expenses based on infringement by the Products or otherwise of any intellectual property right. (c) Buyer Remedy. Omron's sole obligation hereunder shall be, at Omron's election, to (i) replace (in the form originally shipped with Buyer responsible for labor charges for removal or replacement thereof) the non-complying Product, (ii) repair the non-complying Product, or (iii) repay or credit Buyer an amount equal to the purchase price of the non-complying Product; provided that in no event shall Omron be responsible for warranty, repair, indemnity or any other claims or expenses regarding the Products unless Omron's analysis confirms that the Products were properly handled, stored, installed and maintained and not subject to contamination, abuse, misuse or inappropriate modification. Return of any Products by Buyer must be approved in writing by Omron before shipment. Omron Companies shall not be liable for the suitability or unsuitability or the results from the use of Products in combination with any electrical or electronic components, circuits, system assemblies or any other materials or substances or environments. Any advice, recommendations or information given orally or in writing, are not to be construed as an amendment or addition to the above warranty.
See http://www.omron.com/global/ or contact your Omron representative for published information.

Limitation on Liability; Etc.
OMRON COMPANIES SHALL NOT BE LIABLE FOR SPECIAL, INDIRECT, INCIDENTAL, OR CONSEQUENTIAL DAMAGES, LOSS OF PROFITS OR PRODUCTION OR COMMERCIAL LOSS IN ANY WAY CONNECTED WITH THE PRODUCTS, WHETHER SUCH CLAIM IS BASED IN CONTRACT, WARRANTY, NEGLIGENCE OR STRICT LIABILITY.
Further, in no event shall liability of Omron Companies exceed the individual price of the Product on which liability is asserted.

Suitability of Use.
Omron Companies shall not be responsible for conformity with any standards, codes or regulations which apply to the combination of the Product in the Buyer's application or use of the Product. At Buyer's request, Omron will provide applicable third party certification documents identifying ratings and limitations of use which apply to the Product. This information by itself is not sufficient for a complete determination of the suitability of the Product in combination with the end product, machine, system, or other application or use. Buyer shall be solely responsible for determining appropriateness of the particular Product with respect to Buyer's application, product or system. Buyer shall take application responsibility in all cases.
NEVER USE THE PRODUCT FOR AN APPLICATION INVOLVING SERIOUS RISK TO LIFE OR PROPERTY OR IN LARGE QUANTITIES WITHOUT ENSURING THAT THE SYSTEM AS A WHOLE HAS BEEN DESIGNED TO ADDRESS THE RISKS, AND THAT THE OMRON PRODUCT(S) IS PROPERLY RATED AND INSTALLED FOR THE INTENDED USE WITHIN THE OVERALL EQUIPMENT OR SYSTEM.

Programmable Products.
Omron Companies shall not be responsible for the user's programming of a programmable Product, or any consequence thereof.

Performance Data.
Data presented in Omron Company websites, catalogs and other materials is provided as a guide for the user in determining suitability and does not constitute a warranty. It may represent the result of Omron's test conditions, and the user must correlate it to actual application requirements. Actual performance is subject to the Omron's Warranty and Limitations of Liability.

Change in Specifications.
Product specifications and accessories may be changed at any time based on improvements and other reasons. It is our practice to change part numbers when published ratings or features are changed, or when significant construction changes are made. However, some specifications of the Product may be changed without any notice. When in doubt, special part numbers may be assigned to fix or establish key specifications for your application. Please consult with your Omron's representative at any time to confirm actual specifications of purchased Product.

Errors and Omissions.
Information presented by Omron Companies has been checked and is believed to be accurate; however, no responsibility is assumed for clerical, typographical or proofreading errors or omissions.

2025.5

In the interest of product improvement, specifications are subject to change without notice.

OMRON Corporation
Industrial Automation Company

http://www.ia.omron.com/