OMRON

Machine Automation Controller

NJ-series

CPU Unit

Hardware User's Manual

NJ501-□□□□
NJ301-1□□□
NJ101-□□□□
NJ-P□3001
CJ1W-ID□□□/IA□□□
CJ1W-INT01
CJ1W-IDP01
CJ1W-OC□□□/OD□□□/OA□□□
CJ1W-MD□□□
CJ1W-B7A□□

CPU Unit
Power Supply Unit
Basic I/O Units

SYSMAC
always in control

W500-E1-38

NOTE

1. All rights reserved. No part of this publication may be reproduced, stored in a retrieval system, or transmitted, in any form, or by any means, mechanical, electronic, photocopying, recording, or otherwise, without the prior written permission of OMRON.
2. No patent liability is assumed with respect to the use of the information contained herein. Moreover, because OMRON is constantly striving to improve its high-quality products, the information contained in this manual is subject to change without notice.
3. Every precaution has been taken in the preparation of this manual. Nevertheless, OMRON assumes no responsibility for errors or omissions.
   Neither is any liability assumed for damages resulting from the use of the information contained in this publication.

Trademarks

- Sysmac and SYSMAC are trademarks or registered trademarks of OMRON Corporation in Japan and other countries for OMRON factory automation products.
- Microsoft, Windows, Excel, Visual Basic, and Microsoft Edge are either registered trademarks or trademarks of Microsoft Corporation in the United States and other countries.
- EtherCAT® is registered trademark and patented technology, licensed by Beckhoff Automation GmbH, Germany.
- ODVA, CIP, CompoNet, DeviceNet, and EtherNet/IP are trademarks of ODVA.
- The SD and SDHC logos are trademarks of SD-3C, LLC.

Other company names and product names in this document are the trademarks or registered trademarks of their respective companies.

Copyrights

- Microsoft product screen shots used with permission from Microsoft.
- This product incorporates certain third party software. The license and copyright information associated with this software is available at http://www.fa.omron.co.jp/nj_info_e/.

Introduction

Thank you for purchasing an NJ-series CPU Unit.
This manual contains information that is necessary to use the NJ-series CPU Unit. Please read this manual and make sure you understand the functionality and performance of the NJ-series CPU Unit before you attempt to use it in a control system.
Keep this manual in a safe place where it will be available for reference during operation.

Intended Audience

This manual is intended for the following personnel,
who must also have knowledge of electrical systems (an electrical engineer or the equivalent).

- Personnel in charge of introducing FA systems.
- Personnel in charge of designing FA systems.
- Personnel in charge of installing and maintaining FA systems.
- Personnel in charge of managing FA systems and facilities.

For programming, this manual is intended for personnel who understand the programming language specifications in international standard IEC 61131-3 or Japanese standard JIS B 3503.

Applicable Products

This manual covers the following products.

- NJ-series CPU Units
  a) NJ501-□5□□
  b) NJ501-□4□□
  c) NJ501-□3□□
  d) NJ301-12□□
  e) NJ301-11□□
  f) NJ101-10□□
  g) NJ101-90□□

Part of the specifications and restrictions for the CPU Units are given in other manuals. Refer to *Relevant Manuals* on page 2 and *Related Manuals* on page 40.

Relevant Manuals

The following table provides the relevant manuals for the NJ-series CPU Units. Read all of the manuals that are relevant to your system configuration and application before you use the NJ-series CPU Unit.

Most operations are performed from the Sysmac Studio Automation Software. Refer to the *Sysmac Studio Version 1 Operation Manual (Cat. No. W504)* for information on the Sysmac Studio.

Purpose of use	Manual													
	Basic information													
	NJ-series CPU Unit Hardware User's Manual	NJ/NX-series CPU Unit Software User's Manual	NJ/NX-series Instructions Reference Manual	NJ/NX-series CPU Unit Motion Control User's Manual	NJ/NX-series Motion Control Instructions Reference Manual	NJ/NX-series CPU Unit Built-in EtherCAT Port User's Manual	NJ/NX-series CPU Unit Built-in EtherNet/IP Port User's Manual	NJ/NX-series CPU Unit OPC UA User's Manual	NJ/NX-series Database Connection CPU Units User's Manual	NJ-series SECS/GEM CPU Units User's Manual	NJ-series Robot Integrated CPU Unit User's Manual	NJ-series NJ Robotics CPU Unit User's Manual	NJ/NY-series NC Integrated Controller User's Manual	NJ/NX-series Troubleshooting Manual
Introduction to NJ-series Controllers	○													
Setting devices and hardware														
Using motion control	○			○										
Using EtherCAT						○								
Using EtherNet/IP							○							
Using robot control for OMRON robots											○			
Software settings														
Using motion control				○										
Using EtherCAT						○								
Using EtherNet/IP							○							
Using OPC UA								○						
Using the database connection service		○							○					
Using the GEM Services										○				
Using robot control for OMRON robots											○			
Using robot control by NJ Robotics function												○		
Using numerical control													○	

Purpose of use	Manual													
	Basic information													
	NJ-series CPU Unit Hardware User's Manual	NJ/NX-series CPU Unit Software User's Manual	NJ/NX-series Instructions Reference Manual	NJ/NX-series CPU Unit Motion Control User's Manual	NJ/NX-series Motion Control Instructions Reference Manual	NJ/NX-series CPU Unit Built-in EtherCAT Port User's Manual	NJ/NX-series CPU Unit Built-in EtherNet/IP Port User's Manual	NJ/NX-series CPU Unit OPC UA User's Manual	NJ/NX-series Database Connection CPU Units User's Manual	NJ-series SECS/GEM CPU Units User's Manual	NJ-series Robot Integrated CPU Unit User's Manual	NJ-series NJ Robotics CPU Unit User's Manual	NJ/NY-series NC Integrated Controller User's Manual	NJ/NX-series Troubleshooting Manual
Writing the user program		○	○											
Using motion control				○	○									
Using EtherCAT						○								
Using EtherNet/IP							○							
Using OPC UA								○						
Using the database connection service									○					
Using the GEM Services										○				
Using robot control for OMRON robots											○			
Using robot control by NJ Robotics function												○		
Using numerical control													○	
Programming error processing														○
Testing operation and debugging		○												
Using motion control				○										
Using EtherCAT						○								
Using EtherNet/IP							○							
Using OPC UA								○						
Using the database connection service									○					
Using the GEM Services										○				
Using robot control for OMRON robots											○			
Using robot control by NJ Robotics function												○		
Using numerical control													○	
Learning about error management and corrections*1								△	△	△	△	△	△	○
Maintenance	○													
Using motion control				○										
Using EtherCAT						○								
Using EtherNet/IP							○							

*1. Refer to the *NJ/NX-series Troubleshooting Manual (Cat. No. W503)* for the error management concepts and the error items. However, refer to the manuals that are indicated with triangles for details on errors corresponding to the products with the manuals that are indicated with triangles.

Manual Structure

Page Structure

The following page structure is used in this manual.

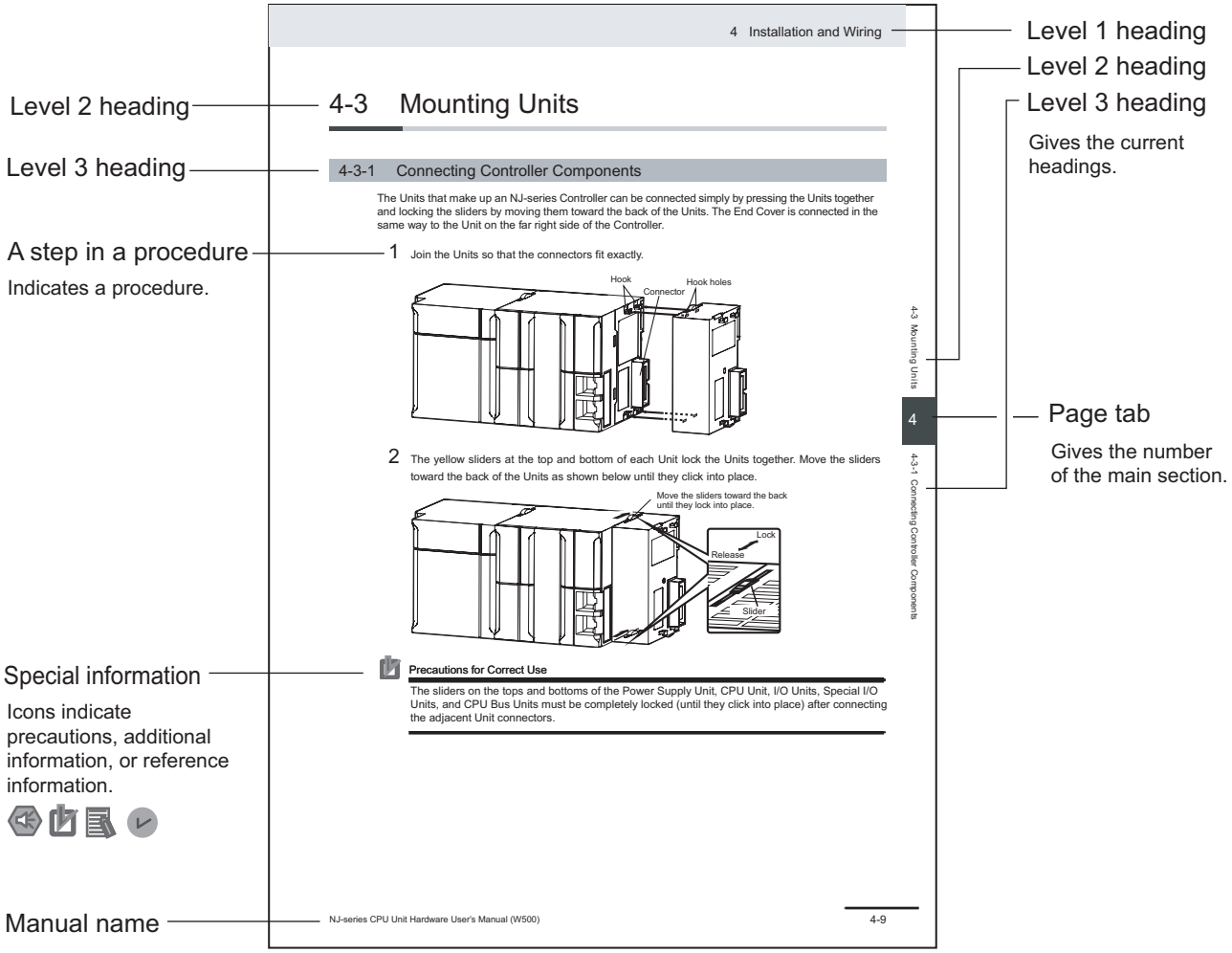

This illustration is provided only as a sample. It may not literally appear in this manual.

Special Information

Special information in this manual is classified as follows:

Precautions for Safe Use

Precautions on what to do and what not to do to ensure safe usage of the product.

Precautions for Correct Use

Precautions on what to do and what not to do to ensure proper operation and performance.

Additional Information

Additional information to read as required.
This information is provided to increase understanding or make operation easier.

Version Information

Information on differences in specifications and functionality for CPU Units with different unit versions and for different versions of the Sysmac Studio is given.

Precaution on Terminology

In this manual, "download" refers to transferring data from the Sysmac Studio to the physical Controller and "upload" refers to transferring data from the physical Controller to the Sysmac Studio.
For the Sysmac Studio, "synchronization" is used to both "upload" and "download" data. Here, "synchronize" means to automatically compare the data for the Sysmac Studio on the computer with the data in the physical Controller and transfer the data in the direction that is specified by the user.

Sections in this Manual

1 Introduction to NJ-series Controllers

2 System Configuration

3 Configuration Units

4 Installation and Wiring

5 Troubleshooting

6 Inspection and Maintenance

A Appendices

I Index

CONTENTS

Introduction **1**
Intended Audience 1
Applicable Products 1

Relevant Manuals **2**

Manual Structure **4**
Page Structure 4
Special Information 5
Precaution on Terminology 5

Sections in this Manual **7**

Terms and Conditions Agreement **12**
Warranty, Limitations of Liability 12
Application Considerations 13
Disclaimers 13
Statement of security responsibilities for assumed use cases and against threats 14

Safety Precautions **15**
Definition of Precautionary Information 15
Symbols 15
Warnings 16
Cautions 18

Precautions for Safe Use **20**

Precautions for Correct Use **30**

Regulations and Standards **35**
Conformance to EU Directives 35
Conformance to KC Certification 35
Conformance to Shipbuilding Standards 36
Software Licenses and Copyrights 36

Versions **37**
Checking Versions 37
Unit Versions of CPU Units and Sysmac Studio Versions 39

Related Manuals **40**

Terminology **43**

Revision History **48**

Section 1 Introduction to NJ-series Controllers

1-1 The NJ-series Controllers **1-2**
1-1-1 Features 1-2
1-1-2 Introduction to the System Configurations 1-4

1-2 Specifications **1-8**

1-3 Overall Operating Procedure for the NJ-series Controller **1-13**

1-3-1 Overall Procedure 1-13
1-3-2 Procedure Details....1-14

Section 2 System Configuration

2-1 Basic System Configuration 2-2
2-1-1 EtherCAT Network Configuration 2-4
2-1-2 CJ-series Unit Configuration 2-5
2-2 Connecting to the Sysmac Studio....2-21
2-3 Network Configuration 2-22

Section 3 Configuration Units

3-1 CPU Units 3-2
3-1-1 Models and Specifications 3-2
3-1-2 Components and Functions 3-3
3-2 SD Memory Cards 3-11
3-2-1 Models and Specifications 3-11
3-2-2 Purpose....3-11
3-2-3 Installing and Removing....3-11
3-3 Power Supply Units 3-14
3-3-1 Models and Specifications 3-14
3-3-2 Components and Functions 3-16
3-3-3 Selecting a Power Supply Unit....3-17
3-4 CJ-series Basic I/O Units 3-22
3-4-1 Models and Specifications 3-22
3-4-2 Part Names and Functions....3-24
3-5 B7A Interface Ports....3-27
3-5-1 Overview 3-27
3-5-2 System Configuration....3-27
3-5-3 Models....3-27
3-5-4 B7A Communications Specifications 3-28
3-5-5 Common Specifications 3-29
3-5-6 B7A Interface Port I/O Types 3-29
3-5-7 Parts and Names 3-30
3-5-8 Transmission Error Processing 3-31
3-6 CJ-series I/O Control Units and I/O Interface Units 3-33
3-6-1 Models and Specifications 3-33
3-6-2 Component and Functions 3-33
3-7 Sysmac Studio 3-34
3-7-1 Model Numbers....3-34
3-7-2 Connection 3-34

Section 4 Installation and Wiring

4-1 Processing at Power ON and Power OFF....4-2
4-1-1 Power ON Operation....4-2
4-1-2 Power OFF Operation 4-3
4-1-3 Resetting the Controller from the Sysmac Studio 4-6
4-2 Fail-safe Circuits 4-7
4-2-1 Order of Powering Up the Controller and Controlled System 4-7
4-3 Mounting Units....4-10
4-3-1 Installation in a Control Panel 4-10
4-3-2 Connecting Controller Components 4-16

4-3-3 DIN Track Installation 4-18
4-3-4 Connecting CJ-series Expansion Racks 4-21
4-3-5 Assembled Appearance and Dimensions 4-24

4-4 Wiring 4-28
4-4-1 Power Supply Wiring 4-28
4-4-2 Wiring the Built-in EtherCAT Port 4-34
4-4-3 Wiring CJ-series Basic I/O Units with Terminal Blocks 4-34
4-4-4 Wiring CJ-series Basic I/O Units with Connectors 4-35
4-4-5 Connecting to Connector-Terminal Block Conversion Units or I/O Relay Terminals 4-40
4-4-6 Connecting I/O Devices 4-42
4-4-7 Wiring the Built-in EtherCAT Port 4-46
4-4-8 Wiring B7A Interface Units 4-47

4-5 Control Panel Installation 4-53
4-5-1 Temperature 4-53
4-5-2 Humidity 4-54
4-5-3 Vibration and Shock 4-55
4-5-4 Atmosphere 4-55
4-5-5 Electrical Environment 4-56
4-5-6 Grounding 4-60

Section 5 Troubleshooting

5-1 Overview of Troubleshooting 5-2

Section 6 Inspection and Maintenance

6-1 Periodic Maintenance and Inspection 6-2
6-1-1 Periodic Inspection 6-2
6-1-2 Unit Replacement Precautions 6-3

6-2 Replacing the Battery 6-5
6-2-1 Battery Replacement 6-5
6-2-2 Operation without a Battery 6-8

Appendices

A-1 Specifications A-2

A-2 Specifications of Basic I/O Units A-3
A-2-1 Overview of Units A-3
A-2-2 Basic I/O Units A-6
A-2-3 Precautions on Contact Output Units A-71
A-2-4 Connecting Connector-Terminal Block Conversion Units and I/O Relay Terminals A-74

A-3 Dimensions A-114
A-3-1 NJ-series CPU Units A-114
A-3-2 NJ-series Power Supply Units A-115
A-3-3 CJ-series Basic I/O Units A-116
A-3-4 B7A Interface Unit A-119
A-3-5 CJ-series I/O Control Unit and I/O Interface Unit A-119
A-3-6 SD Memory Card A-120

A-4 Load Short-circuit Protection and Line Disconnection Detection for CJ-series Basic I/O Units A-121
A-4-1 Load Short-circuit Protection and Line Disconnection Detection for CJ1W-OD202 ....A-121
A-4-2 Load Short-circuit Protection for CJ1W-OD204/OD212/OD232/MD232 ....A-124

A-5 EMC Directive Measures for Relay Outputs A-126

A-6 System-defined Variables Related to Hardware A-128

A-7 Version Information A-129

A-7-1 Relationship between Hardware Revisions of CPU Units and Sysmac Studio Versions A-129
A-7-2 Performance Improvements for Unit Version Upgrades A-129

Index

Terms and Conditions Agreement

Warranty, Limitations of Liability

Warranties

- **Exclusive Warranty**

  Omron's exclusive warranty is that the Products will be free from defects in materials and workmanship for a period of twelve months from the date of sale by Omron (or such other period expressed in writing by Omron). Omron disclaims all other warranties, express or implied.

- **Limitations**

  OMRON MAKES NO WARRANTY OR REPRESENTATION, EXPRESS OR IMPLIED, ABOUT NON-INFRINGEMENT, MERCHANTABILITY OR FITNESS FOR A PARTICULAR PURPOSE OF THE PRODUCTS. BUYER ACKNOWLEDGES THAT IT ALONE HAS DETERMINED THAT THE PRODUCTS WILL SUITABLY MEET THE REQUIREMENTS OF THEIR INTENDED USE.

  Omron further disclaims all warranties and responsibility of any type for claims or expenses based on infringement by the Products or otherwise of any intellectual property right.

- **Buyer Remedy**

  Omron's sole obligation hereunder shall be, at Omron's election, to (i) replace (in the form originally shipped with Buyer responsible for labor charges for removal or replacement thereof) the non-complying Product, (ii) repair the non-complying Product, or (iii) repay or credit Buyer an amount equal to the purchase price of the non-complying Product; provided that in no event shall Omron be responsible for warranty, repair, indemnity or any other claims or expenses regarding the Products unless Omron's analysis confirms that the Products were properly handled, stored, installed and maintained and not subject to contamination, abuse, misuse or inappropriate modification. Return of any Products by Buyer must be approved in writing by Omron before shipment. Omron Companies shall not be liable for the suitability or unsuitability or the results from the use of Products in combination with any electrical or electronic components, circuits, system assemblies or any other materials or substances or environments. Any advice, recommendations or information given orally or in writing, are not to be construed as an amendment or addition to the above warranty.

  See https://www.omron.com/global/ or contact your Omron representative for published information.

Limitation on Liability; Etc

OMRON COMPANIES SHALL NOT BE LIABLE FOR SPECIAL, INDIRECT, INCIDENTAL, OR CONSEQUENTIAL DAMAGES, LOSS OF PROFITS OR PRODUCTION OR COMMERCIAL LOSS IN ANY

WAY CONNECTED WITH THE PRODUCTS, WHETHER SUCH CLAIM IS BASED IN CONTRACT, WARRANTY, NEGLIGENCE OR STRICT LIABILITY.

Further, in no event shall liability of Omron Companies exceed the individual price of the Product on which liability is asserted.

Application Considerations

Suitability of Use

Omron Companies shall not be responsible for conformity with any standards, codes or regulations which apply to the combination of the Product in the Buyer's application or use of the Product. At Buyer's request, Omron will provide applicable third party certification documents identifying ratings and limitations of use which apply to the Product. This information by itself is not sufficient for a complete determination of the suitability of the Product in combination with the end product, machine, system, or other application or use. Buyer shall be solely responsible for determining appropriateness of the particular Product with respect to Buyer's application, product or system. Buyer shall take application responsibility in all cases.

NEVER USE THE PRODUCT FOR AN APPLICATION INVOLVING SERIOUS RISK TO LIFE OR PROPERTY OR IN LARGE QUANTITIES WITHOUT ENSURING THAT THE SYSTEM AS A WHOLE HAS BEEN DESIGNED TO ADDRESS THE RISKS, AND THAT THE OMRON PRODUCT(S) IS PROPERLY RATED AND INSTALLED FOR THE INTENDED USE WITHIN THE OVERALL EQUIPMENT OR SYSTEM.

Programmable Products

Omron Companies shall not be responsible for the user's programming of a programmable Product, or any consequence thereof.

Disclaimers

Performance Data

Data presented in Omron Company websites, catalogs and other materials is provided as a guide for the user in determining suitability and does not constitute a warranty. It may represent the result of Omron's test conditions, and the user must correlate it to actual application requirements. Actual performance is subject to the Omron's Warranty and Limitations of Liability.

Change in Specifications

Product specifications and accessories may be changed at any time based on improvements and other reasons. It is our practice to change part numbers when published ratings or features are changed, or when significant construction changes are made. However, some specifications of the Product may

be changed without any notice. When in doubt, special part numbers may be assigned to fix or establish key specifications for your application. Please consult with your Omron's representative at any time to confirm actual specifications of purchased Product.

Errors and Omissions

Information presented by Omron Companies has been checked and is believed to be accurate; however, no responsibility is assumed for clerical, typographical or proofreading errors or omissions.

Statement of security responsibilities for assumed use cases and against threats

OMRON SHALL NOT BE RESPONSIBLE AND/OR LIABLE FOR ANY LOSS, DAMAGE, OR EXPENSES DIRECTLY OR INDIRECTLY RESULTING FROM THE INFECTION OF OMRON PRODUCTS, ANY SOFTWARE INSTALLED THEREON OR ANY COMPUTER EQUIPMENT, COMPUTER PROGRAMS, NETWORKS, DATABASES OR OTHER PROPRIETARY MATERIAL CONNECTED THERETO BY DISTRIBUTED DENIAL OF SERVICE ATTACK, COMPUTER VIRUSES, OTHER TECHNOLOGICALLY HARMFUL MATERIAL AND/OR UNAUTHORIZED ACCESS.

It shall be the users sole responsibility to determine and use adequate measures and checkpoints to satisfy the users particular requirements for (i) antivirus protection, (ii) data input and output, (iii) maintaining a means for reconstruction of lost data, (iv) preventing Omron Products and/or software installed thereon from being infected with computer viruses and (v) protecting Omron Products from unauthorized access.

Safety Precautions

Definition of Precautionary Information

The following notation is used in this manual to provide precautions required to ensure safe usage of an NJ-series Controller. The safety precautions that are provided are extremely important to safety. Always read and heed the information provided in all safety precautions.
The following notation is used.

WARNING	Indicates a potentially hazardous situation which, if not avoided, could result in death or serious injury. Additionally, there may be severe property damage.
Caution	Indicates a potentially hazardous situation which, if not avoided, may result in minor or moderate injury, or property damage.

Precautions for Safe Use

Indicates precautions on what to do and what not to do to ensure safe usage of the product.

Precautions for Correct Use

Indicates precautions on what to do and what not to do to ensure proper operation and performance.

Symbols

	The circle and slash symbol indicates operations that you must not do. The specific operation is shown in the circle and explained in text. This example indicates prohibiting disassembly.
	The triangle symbol indicates precautions (including warnings). The specific operation is shown in the triangle and explained in text. This example indicates a precaution for electric shock.
	The triangle symbol indicates precautions (including warnings). The specific operation is shown in the triangle and explained in text. This example indicates a general precaution.
	The filled circle symbol indicates operations that you must do. The specific operation is shown in the circle and explained in text. This example shows a general precaution for something that you must do.
	The triangle symbol indicates precautions (including warnings). The specific operation is shown in the triangle and explained in text. This example indicates a precaution for high temperatures.

Warnings

⚠ WARNING

During Power Supply

Do not touch any of the terminals or terminal blocks while the power is being supplied. Doing so may result in electric shock.

Do not attempt to take any Unit apart. In particular, high-voltage parts are present in the Power Supply Unit while power is supplied or immediately after power is turned OFF. Touching any of these parts may result in electric shock. There are sharp parts inside the Unit that may cause injury.

Fail-safe Measures

Provide safety measures in external circuits to ensure safety in the system if an abnormality occurs due to malfunction of the CPU Unit, slaves, or Units or due to other external factors affecting operation. Not doing so may result in serious accidents due to incorrect operation.

Emergency stop circuits, interlock circuits, limit circuits, and similar safety measures must be provided in external control circuits.

The Controller outputs may remain ON or OFF due to deposition or burning of the output relays or destruction of the output transistors. As a countermeasure for such problems, external safety measures must be provided to ensure safe operation of the system.

The CPU Unit will turn OFF all outputs from Basic Output Units in the following cases. The slaves will operate according to the settings in the slaves.

- If an error occurs in the power supply
- If the power supply connection becomes faulty
- If a CPU watchdog timer error or CPU reset occurs
- If a major fault level Controller error occurs
- While the CPU Unit is on standby until RUN mode is entered after the power is turned ON

External safety measures must be provided to ensure safe operation of the system in such cases.

If external power supplies for slaves or other devices are overloaded or short-circuited, the voltage will drop, outputs will turn OFF, and the system may be unable to read inputs. Provide external safety measures in controls with monitoring of external power supply voltage as required so that the system operates safely in such a case.

Unintended outputs may occur when an error occurs in variable memory or in memory used for CJ-series Units. As a countermeasure for such problems, external safety measures must be provided to ensure safe operation of the system.

Provide measures in the communications system and user program to ensure safety in the overall system even if errors or malfunctions occur in data link communications or remote I/O communications.

If there is interference in remote I/O communications or if a major fault level error occurs, output status will depend on the products that are used.
Confirm the operation that will occur when there is interference in communications or a major fault level error, and implement safety measures.
Correctly set all of the settings in the slaves and Units.

The NJ-series Controller continues normal operation for a certain period of time when a momentary power interruption occurs. This means that the NJ-series Controller may receive incorrect signals from external devices that are also affected by the power interruption.
Accordingly, take suitable actions, such as external fail-safe measures and interlock conditions, to monitor the power supply voltage of the external device as required.

You must take fail-safe measures to ensure safety in the event of incorrect, missing, or abnormal signals caused by broken signal lines, momentary power interruptions, or other causes.
Not doing so may result in serious accidents due to incorrect operation.

Voltage and Current Inputs

Make sure that the voltages and currents that are input to the slaves and Units are within the specified ranges.
Inputting voltages or currents that are outside of the specified ranges may cause accidents or fire.

Downloading

Always confirm safety at the destination before you transfer a user program, configuration data, setup data, device variables, or values in memory used for CJ-series Units from the Sysmac Studio.
The devices or machines may perform unexpected operation regardless of the operating mode of the CPU Unit.

Actual Operation

Check the user program, data, and parameter settings for proper execution before you use them for actual operation.

Security Measures

Anti-virus protection
Install the latest commercial-quality antivirus software on the computer connected to the control system and maintain to keep the software up-to-date.

Security measures to prevent unauthorized access

Take the following measures to prevent unauthorized access to our products.

- Install physical controls so that only authorized personnel can access control systems and equipment.
- Reduce connections to control systems and equipment via networks to prevent access from untrusted devices.
- Install firewalls to shut down unused communications ports and limit communications hosts and isolate control systems and equipment from the IT network.
- Use a virtual private network (VPN) for remote access to control systems and equipment.
- Adopt multifactor authentication to devices with remote access to control systems and equipment.
- Set strong passwords and change them frequently.
- Scan virus to ensure safety of USB drives or other external storages before connecting them to control systems and equipment.

Data input and output protection

Validate backups and ranges to cope with unintentional modification of input/output data to control systems and equipment.

- Checking the scope of data
- Checking validity of backups and preparing data for restore in case of falsification and abnormalities
- Safety design, such as emergency shutdown and fail-soft operation in case of data tampering and abnormalities

Data recovery

Backup data and keep the data up-to-date periodically to prepare for data loss.

When using an intranet environment through a global address, connecting to a SCADA or an unauthorized terminal such as an HMI or to an unauthorized server may result in network security issues such as spoofing and tampering. You must take sufficient measures such as restricting access to the terminal, using a terminal equipped with a secure function, and locking the installation area by yourself.

When constructing an intranet, communication failure may occur due to cable disconnection or the influence of unauthorized network equipment. Take adequate measures, such as restricting physical access to network devices, by means such as locking the installation area.

When using a device equipped with the SD Memory Card function, there is a security risk that a third party may acquire, alter, or replace the files and data in the removable media by removing the removable media or unmounting the removable media. Please take sufficient measures, such as restricting physical access to the Controller or taking appropriate management measures for removable media, by means of locking the installation area, entrance management, etc., by yourself.

Cautions

⚠ Caution

Application

Do not touch any Unit when power is being supplied or immediately after the power supply is turned OFF. Doing so may result in burn injury.

Wiring

Be sure that all terminal screws and cable connector screws are tightened to the torque specified in the relevant manuals. The loose screws may result in fire or malfunction.

Online Editing

Execute online editing only after confirming that no adverse effects will be caused by deviations in the timing of I/O. If you perform online editing, the task execution time may exceed the task period, I/O may not be refreshed with external devices, input signals may not be read, and output timing may change.

EtherCAT Communications

If the cable redundancy function is enabled, always write a program to confirm that the network is in the cable redundancy status. If the program is not written, you cannot check that the network is not in the cable redundancy status due to a disconnection on the ring topology.
Use the _EC_RingBreaking system-defined variable to confirm that the network is in the cable redundancy status.

Version Information

The cable redundancy function can be used with project unit version 1.40 or later.

Precaution on Error Message That Says an Instruction May Cause Unintended Operation

Instructions may results in unexpected operation and affect the system if you clear the selection of the *Detect an error when an in-out variable is passed to specific instruction argument* Check Box in the Program Check Area.
Always confirm that the conditions for use that are given in the *NJ/NX-series Instructions Reference Manual (Cat. No. W502)* are met before you clear the selection of this check box.

Version Information

This error message is displayed by and the above option setting is available on Sysmac Studio version 1.02.

Precautions for Safe Use

Disassembly and Dropping

- Do not attempt to disassemble, repair, or modify any Units. Doing so may result in malfunction or fire.
- Do not drop any Unit or subject it to abnormal vibration or shock. Doing so may result in Unit malfunction or burning.

Mounting

- The sliders on the tops and bottoms of the Power Supply Unit, CPU Unit, I/O Units, and other Units must be completely locked (until they click into place) after connecting the adjacent Unit connectors.

Installation

- Always connect to a ground of 100 Ω or less when installing the Units.
- If the LG and GR terminals are connected, make sure to connect them firmly. The LG terminal that is a noise-filtered neutral terminal, has a half electrical potential of the input voltage. Therefore, if you touch the metallic part of the LG terminal, GR terminal, or Controller, while the GR terminal is not grounded, it may result in electrical shock.

Wiring

- Follow the instructions in this manual to correctly perform wiring.
  Double-check all wiring and switch settings before turning ON the power supply.
- Use crimp terminals for wiring.
  Do not connect bare stranded wires directly to terminals.
- Do not pull on the cables or bend the cables beyond their natural limit.
  Do not place heavy objects on top of the cables or other wiring lines. Doing so may break the cables.
- Mount terminal blocks and connectors only after checking the mounting location carefully.
- Be sure that the terminal blocks, expansion cables, and other items with locking devices are properly locked into place.
- Always remove any dustproof labels that are on the top of the Units when they are shipped before you turn ON the power supply.
  If the labels are not removed, heat will accumulate and malfunctions may occur.
- Before you connect a computer to the CPU Unit, disconnect the power supply plug of the computer from the AC outlet. Also, if the computer has an FG terminal, make the connections so that the FG terminal has the same electrical potential as the GR terminal on the Power Supply Unit.
  A difference in electrical potential between the computer and Controller may cause failure or malfunction.

- If the external power supply to an Output Unit or slave has polarity, connect it with the correct polarity. If the polarity is reversed, current may flow in the reverse direction and damage the connected devices regardless of the operation of the Controller.

Task Design

- If the following variables are specified for a condition expression when the execution condition is a condition expression for a variable, event tasks may not be executed when conditions are met or event tasks may be executed when conditions are not met.
  a) Structure members whose data size is 16 bits or more, except for system-defined variables for motion control
  b) Array elements whose data size is 16 bits or more
  For information on event task execution conditions, refer to the *NJ/NX-series CPU Unit Software User's Manual (Cat. No. W501)*.

Power Supply Design

- Do not exceed the rated supply capacity of the Power Supply Units in the NJ-series Controller. The rated supply capacities are given in the *NJ-series CPU Unit Hardware User's Manual (Cat. No. W500)*.
  If the capacity is exceeded, operation may stop, malfunctions may occur, or data may not be backed up normally for power interruptions.
  Use NJ-series Power Supply Units for both the NJ-series CPU Rack and Expansion Racks.
  Operation is not possible if a CJ-series Power Supply Unit is used with an NJ-series CPU Unit or an NJ-series Power Supply Unit is used with a CJ-series CPU Unit.
- Do not apply voltages or connect loads to the Output Units or slaves in excess of the maximum ratings.
- Surge current occurs when the power supply is turned ON. When selecting fuses or breakers for external circuits, consider the above precaution and allow sufficient margin in shut-off performance. Refer to the relevant manuals for surge current specifications. Refer to the *NJ-series CPU Unit Hardware User's Manual (Cat. No. W500)* for surge current specifications.
- If the full dielectric strength voltage is applied or turned OFF using the switch on the tester, the generated impulse voltage may damage the Power Supply Unit. Use the adjustment on the tester to gradually increase and decrease the voltage.
- Apply the voltage between the Power Supply Unit's L1 or L2 terminal and the GR terminal when testing insulation and dielectric strength.
- Do not supply AC power from an inverter or other device with a square-wave output. Internal temperature rise may result in smoking or burning. Always input a sinusoidal wave with the frequency that is given in the *NJ-series CPU Unit Hardware User's Manual (Cat. No. W500)*.
- Install external breakers and take other safety measures against short-circuiting in external wiring.

Turning ON the Power Supply

- It takes up to approximately 10 to 20 s to enter RUN mode after the power is turned ON. The outputs during this time behave according to the slave or Unit specifications. Use the RUN output on

the Power Supply Unit, for example, to implement fail-safe circuits so that external devices do not operate incorrectly.

- Configure the external circuits so that the power supply to the control system turns ON only after the power supply to the Controller has turned ON. If the power supply to the Controller is turned ON after the control power supply, temporary errors may result in incorrect control system signals because the output terminals on Output Units may momentarily turn ON when power supply is turned ON to the Controller.
- If you transfer data from a backup file on an SD Memory Card to the Controller when the power supply is turned ON, properly select the data groups to transfer. If the data for an unintended data group is transferred to the Controller, it may cause the equipment to operate unpredictably.
- In the CPU Unit with unit version 1.05 or earlier, never turn OFF the power supply to the Controller until RUN mode is entered after the power is turned ON. If the power supply is turned OFF, a Battery-backup Memory Check Error may occur at next time you start operation. If a Battery-backup Memory Check Error occurs, the variables retained are set to their initial values and the Holding, DM and EM Areas in memory used for CJ-series Units are cleared to all zeros. If you want to resume the operation, reload the correct data for the variables retained and CJ-series Unit memory, as required.

Turning OFF the Power Supply

- Never turn OFF the power supply to the Controller when the BUSY indicator is flashing. While the BUSY indicator is lit, the user program and settings in the CPU Unit are being backed up in the built-in non-volatile memory. This data will not be backed up correctly if the power supply is turned OFF. Also, a major fault level Controller error will occur the next time you start operation, and operation will stop.
- Do not turn OFF the power supply or remove the SD Memory Card while SD Memory Card access is in progress (i.e., while the SD BUSY indicator flashes). Data may become corrupted, and the Controller will not operate correctly if it uses corrupted data. To remove the SD Memory Card from the CPU Unit while the power supply is ON, press the SD Memory Card power supply switch and wait for the SD BUSY indicator to turn OFF before you remove the SD Memory Card.
- Do not disconnect the cable or turn OFF the power supply to the Controller when downloading data or the user program from Support Software.
- Always turn OFF the power supply to the Controller before you attempt any of the following.
  a) Mounting or removing I/O Units or the CPU Unit
  b) Assembling the Units
  c) Setting DIP switches or rotary switches
  d) Connecting cables or wiring the system
  e) Connecting or disconnecting the connectors

  The Power Supply Unit may continue to supply power to the rest of the Controller for a few seconds after the power supply turns OFF. The PWR indicator is lit during this time. Confirm that the PWR indicator is not lit before you perform any of the above.

Operation

- Confirm that no adverse effect will occur in the system before you attempt any of the following.

a) Changing the operating mode of the CPU Unit (including changing the setting of the Startup Mode)
b) Changing the user program or settings
c) Changing set values or present values
d) Forced refreshing

- After you change any slave or Unit settings, carefully check the safety of the controlled system before you restart the Unit.
- If two different function modules are used together, such as when you use CJ-series Basic Units and EtherCAT slaves, take suitable measures in the user program and external controls to ensure that safety is maintained in the controlled system if one of the function modules stops. The relevant outputs will behave according to the slave or Unit specifications if a partial fault level error occurs in one of the function modules.
- Always confirm safety at the connected equipment before you reset Controller errors with an event level of partial fault or higher for the EtherCAT Master Function Module.
  When the error is reset, all slaves that were in any state other than Operational state due to a Controller error with an event level of partial fault or higher (in which outputs are disabled) will go to Operational state and the outputs will be enabled.
  Before you reset all errors or restart a slave, confirm that no Controller errors with an event level of partial fault have occurred for the EtherCAT Master Function Module.
- Always confirm safety at the connected equipment before you reset Controller errors for a CJ-series Special Unit. When a Controller error is reset, the Unit where the Controller error with an event level of observation or higher will be restarted.
  Before you reset all errors, confirm that no Controller errors with an event level of observation or higher have occurred for the CJ-series Special Unit. Observation level events do not appear on the Controller Error Tab Page, so it is possible that you may restart the CJ-series Special Unit without intending to do so.
  You can check the status of the *_CJB_UnitErrSta[0,0]* to *_CJB_UnitErrSta[3,9]* error status variables on a Watch Tab Page to see if an observation level Controller error has occurred.
- Always confirm safety at the connected equipment before you perform the following operations when the device output hold configuration is set to enable. The equipment may operate unexpectedly because the last status for outputs is retained.
  a) Changing the operating mode of the CPU Unit
  b) When downloaded

Battery Backup

- The user program and initial values for the variables are stored in non-volatile memory in the CPU Unit. The present values of variables with the Retain attribute and the values of the Holding, DM, and EM Areas in the memory used for CJ-series Units are backed up by a Battery.
  If the Battery is not connected or the Battery is exhausted, the CPU Unit detects a Battery-backup Memory Check Error.
  If that error is detected, variables with a Retain attribute are set to their initial values and the Holding, DM, and EM Areas in memory used for CJ-series Units are cleared to all zeros.
  Perform thorough verifications and provide sufficient measures to ensure that the devices perform safe operation for the initial values of the variables with Retain attributes and the resulting operation.
- The absolute encoder home offsets are backed up by a Battery. If the CPU Unit detects a low battery voltage or the absence of a mounted battery when the power supply to the Controller is turned

ON, the absolute encoder home offsets are cleared to zeros and an Encoder Home Offset Read Error occurs. Reset the error and perform homing to define home. If you do not define home, unintended operation of the controlled system may occur.

- To prevent the user program from operating with an unintended value in the retained variables or the retained areas in the memory used for CJ-series Units or in the absolute encoder home offset position, use the system-defined variable *_RetainUnexec* (Retention Inexecution Flag) in the user program as an interlock condition as required.

Debugging

- Forced refreshing ignores the results of user program execution and refreshes I/O with the specified values. If forced refreshing is used for inputs for which I/O refreshing is not supported, the inputs will first take the specified values, but they will then be overwritten by the user program. This operation differs from the force-set/reset functionality of the CJ-series PLCs.
- You cannot upload or download information for forced refreshing with the Sysmac Studio.
  After downloading data that contains forced refreshing, change to RUN mode and then use the Sysmac Studio to perform the operation for forced refreshing.
  Depending on the difference in the forced status, the control system may operate unexpectedly.
- Do not specify the same address for the AT specification for more than one variable.
  Doing so would allow the same entity to be accessed with different variable names, which would make the user program more difficult to understand and possibly cause programming mistakes.

General Communications

- When you use data link communications, check the error information that is given in *_ErrSta* (Controller Error Status) to make sure that no error has occurred in the source device.
  Create a user program that uses reception data only when there is no error in the source device. If there is an error in the source device, the data for the data link may contain incorrect values.
- Unexpected operation may result if inappropriate data link tables are set. Even if appropriate data link tables have been set, confirm that the controlled system will not be adversely affected before you transfer the data link tables. The data links start automatically after the data link tables are transferred.
- All CPU Bus Units are restarted when routing tables are transferred from Support Software to the CPU Unit. Confirm that the system will not be adversely affected by restarting before you transfer the routing tables.
- Tag data links will stop between related nodes while tag data link parameters are transferred during Controller operation. Confirm that the system will not be adversely affected before you transfer the tag data link parameters.

EtherNet/IP Communications

- Make sure that the communications distance, number of nodes connected, and method of connection for EtherNet/IP are within specifications. Do not connect EtherNet/IP communications to EtherCAT or other networks. An overload may cause the network to fail or malfunction.
- All related EtherNet/IP nodes are reset when you transfer settings for the built-in EtherNet/IP port (including IP addresses and tag data links settings). The settings can only be enabled after the

reset. Confirm that the system will not be adversely affected by resetting nodes before you transfer the settings.

- If EtherNet/IP tag data links (cyclic communications) are used with a repeating hub, the communications load on the network will increase. This will increase collisions and may prevent stable communications. Do not use repeating hubs on networks where tag data links are used. Use an Ethernet switch instead.

EtherCAT Communications

- Make sure that the communications distance, number of nodes connected, and method of connection for EtherCAT are within specifications.
  Do not connect EtherCAT communications to EtherNet/IP, a standard in-house LAN, or other networks. An overload may cause the network to fail or malfunction.
- Malfunctions or unexpected operation may occur for some combinations of EtherCAT revisions of the master and slaves. If you disable the revision check in the network settings, use the Sysmac Studio to check the slave revision settings in the master and the actual slave revisions, and then make sure that functionality is compatible in the slave manuals or other references. You can check the actual slave revisions from the Sysmac Studio or on slave nameplates.
- After you transfer the user program, the CPU Unit is restarted and communications with the EtherCAT slaves are cut off. During that period, the slave outputs behave according to the slave specifications. The time that communications are cut off depends on the EtherCAT network configuration. Before you transfer the user program, confirm that the system will not be adversely affected.
- If the Fail-soft Operation parameter is set to stop operation, process data communications will stop for all slaves when an EtherCAT communications error is detected in a slave. At that time, the Servo Drive will operate according to the Servo Drive specifications. Make sure that the Fail-soft Operation parameter setting results in safe operation when a device error occurs.
- EtherCAT communications are not always established immediately after the power supply is turned ON. Use the system-defined variables in the user program to confirm that communications are established before attempting control operations.
- If noise occurs or an EtherCAT slave is disconnected from the network, any current communications frames may be lost. If frames are lost, slave I/O data is not communicated, and unintended operation may occur. The slave outputs will behave according to the slave specifications.
  Refer to the manual for the slave. If a noise countermeasure or slave replacement is required, perform the following processing.
  a) Program the Input Data Invalid system-defined variable as an interlock condition in the user program.
  b) Set the PDO communications timeout detection count setting in the EtherCAT master to at least 2. Refer to the *NJ/NX-series CPU Unit Built-in EtherCAT Port User's Manual (Cat. No. W505)* for details.
- When an EtherCAT slave is disconnected, communications will stop and control of the outputs will be lost not only for the disconnected slave, but for all slaves connected after it through to the physical end node. Confirm that the system will not be adversely affected before you disconnect a slave.
- I/O data communications of NX bus are not always established immediately after the power supply is turned ON. Use the system-defined variables and the EtherCAT Coupler Unit device variables in the user program to confirm that I/O data communications are established before attempting control operations.

- You cannot use standard Ethernet hubs or repeater hubs with EtherCAT communications. If you use one of these, a major fault level error or other error may occur.
- Confirm that all of the slaves are connected before you set the transmission delay time by the actual measurement. If the transmission delay time is exceeded from the set values due to the changes of the unit configuration, such as when the disabled salve is connected to the actual configuration after the setting, it may cause illegal communications with slaves.
- When the communications cable that is connected to the slave from other manufacturers on the ring topology is broken or the power supply to the slave from other manufacturers is interrupted, any current communications frames may be lost.
  If frames are lost, slave I/O data is not communicated, and unintended operation may occur.
  When slaves from other manufacturers are connected on the ring topology, check the followings in advance.
  a) Disconnect and connect communications cables that are connected to the output ports of slaves from other manufacturers several times, and there is no error except for a *Ring Disconnection Detected*.
  b) Disconnect and connect communications cables that are connected to the input ports of slaves from other manufacturers several times, and there is no error except for a *Ring Disconnection Detected*.
  c) Turn OFF and ON the power supply to the slaves from other manufacturers, and there is no error except for a *Illegal Slave Disconnection Detected*.
- If you use the cable redundancy function, confirm that the task execution time is within the task period while the cable for the end port of the ring is disconnected. When a disconnection occurred on the ring topology, the transmission delay time is increased and the task execution time may be longer.

Version Information

The cable redundancy function can be used with project unit version 1.40 or later.

Motion Control

- Confirm the axis number carefully before you perform an MC Test Run.
- The motor is stopped if communications are interrupted between the Sysmac Studio and the CPU Unit during an MC Test Run. Connect the communications cable between the computer and CPU Unit securely and confirm that the system will not be adversely affected before you perform an MC Test Run.
- Always execute the Save Cam Table instruction if you change any of the cam data from the user program in the CPU Unit or from the Sysmac Studio. If the cam data is not saved, the previous condition will be restored when the power is turned ON again, possibly causing unexpected machine operation.
- The positive drive prohibit input (POT), negative drive prohibit input (NOT), and home proximity input (DEC) of the Servo Drive are used by the MC Function Module as the positive limit input, negative limit input, and home proximity input. Make sure that the signal widths for all of these input signals are longer than the control period of the MC Function Module. If the input signal widths are shorter than the control period, the MC Function Module may not be able to detect the input signals, resulting in incorrect operation.

- If you make any changes in the Detailed Settings Area of the **Axis Basic Settings** Display of the Sysmac Studio, make sure that the devices or machines perform the expected operation before you start actual operation.
  If the relationship between the functions of the Motion Control Function Module and the EtherCAT slave process data that is assigned to the axes is not correct, the devices or machines may perform unexpected operation.
- Always use the axis at a constant velocity for the MC_DigitalCamSwitch (Enable Digital Cam Switch) instruction.
  If you set the Count Mode to Rotary Mode, the following operation will occur if you use OnCompensation or OffCompensation and the axis velocity changes abruptly.
  a) If the value of OnCompensation or OffCompensation is equivalent to the time for half a rotation or more, InOperation will be FALSE.
  b) If the value of OnCompensation results in exceeding LastOnPosition, the output timing will be unstable.

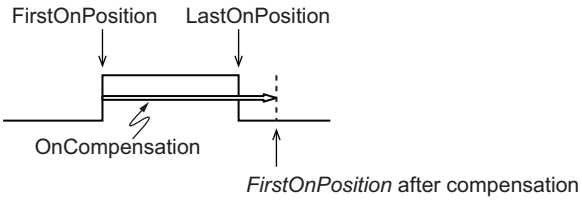

  c) If the value of OffCompensation results in exceeding FirstOnPosition, the output timing will be unstable.

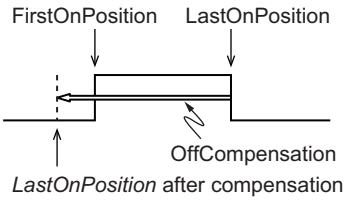

- Use the NX_AryDOutTimeStamp (Write Digital Output Array with Specified Time Stamp) instruction only after you confirm that InOperation from the MC_DigitalCamSwitch (Enable Digital Cam Switch) instruction is TRUE.
- If you change the unit conversion settings, perform homing again. If you do not perform homing, unintended operation of the controlled system may occur.
- Do not execute the following instructions to change the cam table which is in operation. Otherwise, an unintended operation may occur.
  a) MC_SetCamTableProperty (Setting cam table properties) instruction
  b) MC_SetCamTableEndPointIndex (Setting cam table end point index) instruction
  c) MC_GenerateCamTable (Generating cam tables) instruction

Restoring Data

- You cannot back up, restore, or compare some or all of the settings for certain slaves and Units. Also, you cannot back up, restore, or compare data for disabled slaves or Units. After you restore data, sufficiently confirm that operation is correct before you start actual operation.
- The absolute encoder home offsets are backed up with a Battery in the CPU Unit as absolute encoder information. If any of the following conditions is met, clear the absolute encoder home offsets from the list of data items to restore, and then restore the data. Then, define the absolute encoder home again. If you do not define home, unintended operation of the controlled system may occur.

a) The Servomotor or Servo Drive was changed since the data was backed up.
b) The absolute encoder was set up after the data was backed up.
c) The absolute data for the absolute encoder was lost.

Transferring Programs

- When you use the program transfer from SD Memory Card whose Startup Mode setting is set to RUN mode, the operating mode changes to RUN after the transfer is completed regardless of the status and setting before the transfer. Use this function after you confirm that system startup does not cause any problem.

Battery Replacement

- The Battery may leak, rupture, heat, or ignite. Never short-circuit, charge, disassemble, heat, or incinerate the Battery or subject it to strong shock.
- Dispose of any Battery that has been dropped on the floor or otherwise subjected to excessive shock. Batteries that have been subjected to shock may leak if they are used.
- UL standards require that only an experienced engineer replace the Battery. Make sure that an experienced engineer is in charge of Battery replacement.
- Apply power for at least five minutes before changing the Battery. Install a new Battery within five minutes (at 25°C) of turning OFF the power supply. If power is not supplied for at least 5 minutes, the saved data may be lost.
- We recommend replacing the Battery with the power turned OFF to prevent the CPU Unit's sensitive internal components from being damaged by static electricity and to prevent malfunctions. The Battery can be replaced without turning OFF the power supply. To do so, always touch a grounded piece of metal to discharge static electricity from your body before you start the procedure.
  After you replace the Battery, connect the Sysmac Studio and clear the Low Battery Voltage error.

Unit Replacement

- Make sure that the required data, including the user program, configurations, settings, variables, and memory used for CJ-series Units, is transferred to a CPU Unit that was replaced and to externally connected devices before restarting operation. Be sure to include the tag data link settings, routing tables, and other CPU Bus Unit data, which are stored in the CPU Unit.
- The absolute encoder home offsets are backed up with a Battery in the CPU Unit as absolute encoder information. When you change the combination of the CPU Unit and Servomotor, e.g., when you add or replace a Servomotor, define the absolute encoder home again.
- The performance may be different if the hardware revisions are different. Before you transfer the user program, data, and parameter settings to the CPU Units with the different hardware revisions, check them for proper execution and then use them for actual operation.

Disposal

- Dispose of the product and Batteries according to local ordinances as they apply.

廃電池請回收

- The following information must be displayed for all products that contain primary lithium batteries with a perchlorate content of 6 ppb or higher when shipped to or transported through the State of California, USA.
  Perchlorate Material - special handling may apply.
  See www.dtsc.ca.gov/hazardouswaste/perchlorate.
- The CPU Unit contains a primary lithium battery with a perchlorate content of 6 ppb or higher. Place the above information on the individual boxes and shipping boxes when shipping finished products that contain a CPU Unit to the State of California, USA.

Precautions for Correct Use

Storage and Installation

- Follow the instructions in this manual to correctly perform installation.
- Do not operate or store the Controller in the following locations. Operation may stop or malfunctions may occur.
  a) Locations subject to direct sunlight
  b) Locations subject to temperatures or humidity outside the range specified in the specifications
  c) Locations subject to condensation as the result of severe changes in temperature
  d) Locations subject to corrosive or flammable gases
  e) Locations subject to dust (especially iron dust) or salts
  f) Locations subject to exposure to water, oil, or chemicals
  g) Locations subject to shock or vibration
- Take appropriate and sufficient countermeasures when installing the Controller in the following locations.
  a) Locations subject to strong, high-frequency noise
  b) Locations subject to static electricity or other forms of noise
  c) Locations subject to strong electromagnetic fields
  d) Locations subject to possible exposure to radioactivity
  e) Locations close to power lines
- Before touching a Unit, be sure to first touch a grounded metallic object in order to discharge any static build-up.
- Install the Controller away from sources of heat and ensure proper ventilation. Not doing so may result in malfunction, in operation stopping, or in burning.
- When you use a Controller that has not been operated for more than six months, make sure that there are no errors when the power is turned ON.

Mounting

- An I/O bus check error will occur and the Controller will stop if an I/O Connecting Cable's connector is disconnected from the Rack. Be sure that the connectors are secure.

Wiring

- Do not allow foreign matter to enter the openings in the Unit. Doing so may result in Unit burning, electric shock, or failure.
- Do not allow wire clippings, shavings, or other foreign material to enter any Unit. Otherwise, Unit burning, failure, or malfunction may occur. Cover the Units or take other suitable countermeasures, especially during wiring work.
- For EtherCAT and EtherNet/IP, use the connection methods and cables that are specified in the *NJ/NX-series CPU Unit Built-in EtherCAT Port User's Manual (Cat. No. W505)* and the *NJ/NX-series CPU Unit Built-in EtherNet/IP Port User's Manual (Cat. No. W506)*. Otherwise, communications may be faulty.

- Use the rated power supply voltage for the Power Supply Units. Take appropriate measures to ensure that the specified power with the rated voltage and frequency is supplied in places where the power supply is unstable.
- Make sure that the current capacity of the wire is sufficient. Otherwise, excessive heat may be generated. When cross-wiring terminals, the total current for all the terminals will flow in the wire. When wiring cross-overs, make sure that the current capacity of each of the wires is not exceeded.
- Do not touch the terminals on the Power Supply Unit immediately after turning OFF the power supply. Residual voltage may cause electrical shock.
- If you use reed switches for the input contacts for AC Input Units, use switches with a current capacity of 1 A or greater.
  If the capacity of the reed switches is too low, surge current may fuse the contacts.

Operation

- Confirm the device output hold configuration before you change the operating mode of the CPU Unit or execute the download.

Error Processing

- In applications that use the results of instructions that read the error status, consider the affect on the system when errors are detected and program error processing accordingly. For example, even the detection of a minor error, such as Battery replacement during operation, can affect the system depending on how the user program is written.
- If you change the event level of a Controller error, the output status when the error occurs may also change. Confirm safety before you change an event level.

Restoring and Automatically Transferring Data

- When you edit the restore command file or the automatic transfer command file, do not change anything in the file except for the “yes” and “no” specifications for the selectable data groups. If you change anything else in the file, the Controller may perform unexpected operation when you restore or automatically transfer the data.
- To prevent an unexpected restoration, set to enter the password for each execution before the restore operation.

Transferring Programs

- If you use the program transfer from SD Memory Card, set to enter the password for each execution to prevent an unexpected program transfer.

Replacing Slaves and Units

- If you replace a slave or Unit, refer to the operation manual for the slave or Unit for information on the data required for individual slaves or Units and redo the necessary settings.

Task Settings

- If a Task Period Exceeded error occurs, shorten the programs to fit in the task period or increase the setting of the task period.

Motion Control

- Use the system-defined variable in the user program to confirm that EtherCAT communications are established before you attempt to execute motion control instructions. Motion control instructions are not executed normally if EtherCAT communications are not established.
- Use the system-defined variables to monitor for errors in communications with the slaves that are controlled by the motion control function module. Motion control instructions are not executed normally if an error occur in slave communications.
- Before you start an MC Test Run, make sure that the operation parameters are set correctly.
- Do not download motion control settings during an MC Test Run.

EtherCAT Communications

- If you need to disconnect the cable from an EtherCAT slave during operation, first disconnect the software connection to the EtherCAT slave or disable the EtherCAT slave and all of the EtherCAT slaves that are connected after it.
- Set the Servo Drives to stop operation if an error occurs in EtherCAT communications between the Controller and a Servo Drive.
- Make sure that all of the slaves to be restored are participating in the network before you reset a Network Configuration Verification Error, Network Configuration Verification Error (Mismatched Slave), Network Configuration Verification Error (Slave Unconnected), Network Configuration Verification Error (Unnecessary Slave Connected), Network Configuration Verification Error (Incorrect Ring Wiring), Process Data Communications Error, Illegal Slave Disconnection Detected or Link OFF Error in the EtherCAT Master Function Module. If any slave is not participating when any of these errors is reset, the EtherCAT Master Function Module may access salve with a different node address than the specified node address or the error may not be reset correctly.
- Always use the specified EtherCAT slave cables. If you use any other cable, the EtherCAT master or the EtherCAT slaves may detect an error and one of the following may occur.
  a) Continuous refreshing of process data communications will not be possible.
  b) Continuous refreshing of process data communications will not end during the set cycle.
- If you execute a clear operation of diagnostic and statistical information during readout of the diagnostic and statistical information, the diagnostic and statistical information that is cleared to 0 may be read.

Battery Replacement

- Be sure to install a replacement Battery within two years of the production date shown on the Battery label.
- Turn ON the power after replacing the Battery for a CPU Unit that has been unused for a long time. Leaving the CPU Unit unused again without turning ON the power even once after the Battery is replaced may result in a shorter Battery life.

- When you replace the Battery, use the CJ1W-BAT01 Battery Set.

SD Memory Cards

- Insert the SD Memory Card all the way.
- Do not turn OFF the power supply to the Controller during SD Memory Card access. The files may be corrupted.
  If there is a corrupted file in the SD Memory Card, the file is automatically deleted by the restoration function when the power supply is turned ON.
- If you use an OMRON SD Memory Card, the end of the life of the SD Memory Card can be detected in the following ways.
  a) *_Card1Deteriorated* (SD Memory Card Life Warning Flag) system-defined variable
  b) SD Memory Card Life Exceeded event in the event log
  When the end of the life is detected in any of the above ways, replace the SD Memory Card.

Version Information

Combination of the CPU Unit version and SD Memory Card determines whether the SD memory card life expiration detection function can be used or not. Refer to *Specifications of Supported SD Memory Cards, Folders, and Files* in the *NJ/NX-series CPU Unit Software User's Manual (Cat. No. W501)* for details.

Online Editing

- When performing online editing in combination of a CPU Unit with a unit version of 1.04 or later and Sysmac Studio version 1.05 or higher, the CPU Unit saves a program updated by the online editing to built-in non-volatile memory. Sysmac Studio shows a message that it is in a backup operation. Do not turn OFF the power supply to the Controller while this message is displayed. If the power supply to the Controller is turned OFF, a Controller error will occur when the power supply is turned ON next time.

Debugging

- If you use data tracing to sample following variables, correct data may not be sampled.
  a) Structure members whose data size is 16 bits or more, except for system-defined variables for motion control
  b) Array elements whose data size is 16 bits or more
- For information on data tracing, refer to the *NJ/NX-series CPU Unit Software User's Manual (Cat. No. W501)*.

Secure Communication

- If you transfer a project with project unit version earlier than 1.69 to a CPU Unit that is set to use secure communications version 2, the CPU Unit's secure communications version will be changed to 1.

- If you restore a backup file with project unit version earlier than 1.69 to a CPU Unit that is set to use secure communications version 2, the CPU Unit's secure communications version will be changed to 1.
- Setting the secure communications version to 2 always enables user authentication. When user authentication is enabled, users are required to enter their user name and password to go online.
- When you use a CPU Unit that is set to use secure communications version 2 and an NA-series Programmable Terminal that supports secure communication, please note that there is the following restriction.

  The troubleshooter function of the NA-series Programmable Terminal cannot be used.
- When you use a CPU Unit that is set to use secure communications version 2 with an NA-series Programmable Terminal and Soft-NA that do not support secure communication, please note that there are the following restrictions.

  a) The NA-series Programmable Terminal cannot be connected.

  b) The troubleshooter of the NS-series Programmable Terminal cannot be used.

Disposal

- When disposing of or transferring our products, information such as user data stored in the device may be seen by third parties, resulting in information leakage. It is recommended that you erase the data on your responsibility before disposing of or transferring the device. Omron shall not be liable for any loss, damage, or other expenses incurred directly or indirectly in the event of any information leakage due to disposal or transfer.

  For details on *complete data erasure function* for completely erasing user data, refer to the *NJ/NX-series CPU Unit Software User's Manual (Cat. No. W501)*.

Regulations and Standards

Conformance to EU Directives

Applicable Directives

- EMC Directives
- Low Voltage Directive

Concepts

● EMC Directive

OMRON devices that comply with EU Directives also conform to the related EMC standards so that they can be more easily built into other devices or the overall machine. The actual products have been checked for conformity to EMC standards.*1
Whether the products conform to the standards in the system used by the customer, however, must be checked by the customer. EMC-related performance of the OMRON devices that comply with EU Directives will vary depending on the configuration, wiring, and other conditions of the equipment or control panel on which the OMRON devices are installed. The customer must, therefore, perform the final check to confirm that devices and the overall machine conform to EMC standards.

*1. Applicable EMC (Electromagnetic Compatibility) standards are as follows:
EMS (Electromagnetic Susceptibility): EN 61131-2
EMI (Electromagnetic Interference): EN 61131-2 (Radiated emission: 10-m regulations)

● Low Voltage Directive

Always ensure that devices operating at voltages of 50 to 1,000 VAC and 75 to 1,500 VDC meet the required safety standards. The applicable directive is EN 61010-2-201.

● Conformance to EU Directives

The NJ-series Controllers comply with EU Directives. To ensure that the machine or device in which the NJ-series Controller is used complies with EU Directives, the Controller must be installed as follows:

- The NJ-series Controller must be installed within a control panel.
- You must use the power supply in SELV specifications for the DC power supplies connected to DC Power Supply Units and I/O Units.
- NJ-series Controllers that comply with EU Directives also conform to the Common Emission Standard (EN 61000-6-4). Radiated emission characteristics (10-m regulations) may vary depending on the configuration of the control panel used, other devices connected to the control panel, wiring, and other conditions.
  You must therefore confirm that the overall machine or equipment complies with EU Directives.

Conformance to KC Certification

Observe the following precaution if you use NX-series Units in Korea.

A급 기기 (업무용 방송통신기자재)
이 기기는 업무용(A급) 전자파적합기기로서 판매자
또는 사용자는 이 점을 주의하시기 바라며, 가정외의
지역에서 사용하는 것을 목적으로 합니다.

Class A Device (Broadcasting Communications Device for Office Use)
This device obtained EMC registration for office use (Class A), and it is intended to be used in places other than homes.
Sellers and/or users need to take note of this.

Conformance to Shipbuilding Standards

The NJ-series Controllers comply with the following shipbuilding standards. Applicability to the shipbuilding standards is based on certain usage conditions. It may not be possible to use the product in some locations. Contact your OMRON representative before attempting to use a Controller on a ship.

Usage Conditions for NK and LR Shipbuilding Standards

- The NJ-series Controller must be installed within a control panel.
- Gaps in the door to the control panel must be completely filled or covered with gaskets or other material.
- The following noise filter must be connected to the power supply line.

Noise Filter

Manufacturer	Model
Cosel Co., Ltd.	TAH-06-683

Software Licenses and Copyrights

This product incorporates certain third party software. The license and copyright information associated with this software is available at http://www.fa.omron.co.jp/nj_info_e/.

Versions

Hardware revisions and unit versions are used to manage the hardware and software in NJ-series Units and EtherCAT slaves. The hardware revision or unit version is updated each time there is a change in hardware or software specifications. Even when two Units or EtherCAT slaves have the same model number, they will have functional or performance differences if they have different hardware revisions or unit versions.

Checking Versions

You can check versions on the ID information indications or with the Sysmac Studio.

Checking Unit Versions on ID Information Indications

The unit version is given on the ID information indication on the side of the product.
The ID information on an NJ-series NJ501-1□00 CPU Unit is shown below.

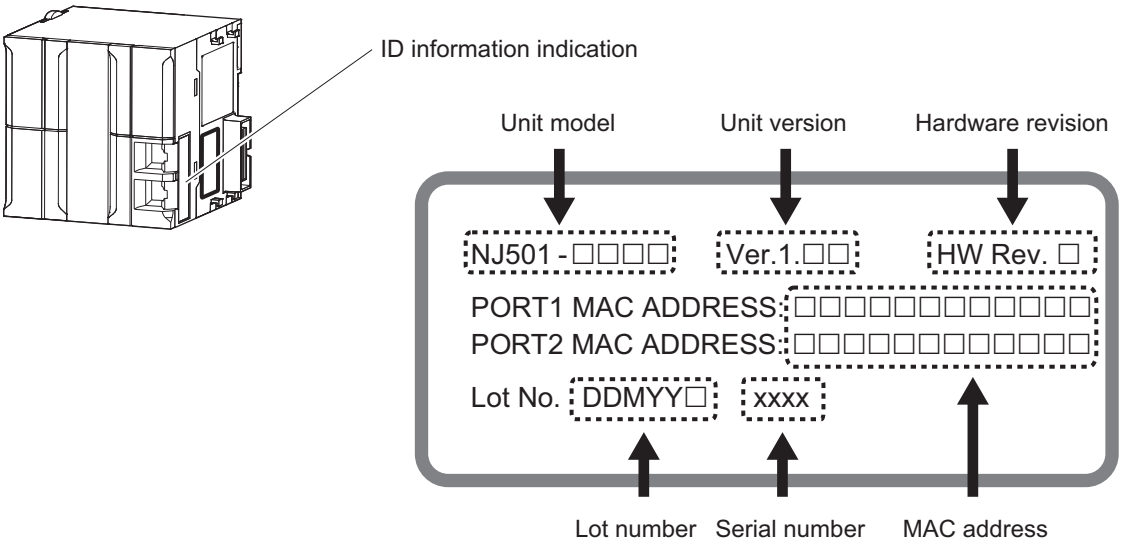

Note The hardware revision is not displayed for the Unit that the hardware revision is in blank.

Checking Unit Versions with the Sysmac Studio

You can use the Sysmac Studio to check unit versions. The procedure is different for Units and for EtherCAT slaves.

● Checking the Unit Version of a Unit

You can use the Production Information while the Sysmac Studio is online to check the unit version of a Unit. You can do this for the CPU Unit, CJ-series Special I/O Units, and CJ-series CPU Bus Units. You cannot check the unit versions of CJ-series Basic I/O Units with the Sysmac Studio. Use the following procedure to check the unit version.

1 Double-click **CPU/Expansion Racks** under **Configurations and Setup** in the Multiview Explorer. Or, right-click **CPU/Expansion Racks** under **Configurations and Setup** and select **Edit** from the menu.
The Unit Editor is displayed.

2 Right-click any open space in the Unit Editor and select **Production Information.**
The **Production Information** Dialog Box is displayed.

● Changing Information Displayed in Production Information Dialog Box

1 Click the **Show Detail** or **Show Outline** Button at the lower right of the Production Information Dialog Box.
The view will change between the production information details and outline.

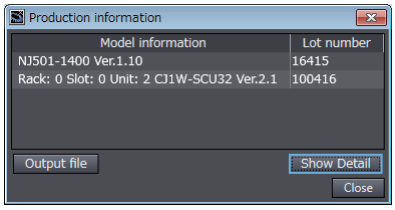

Outline View

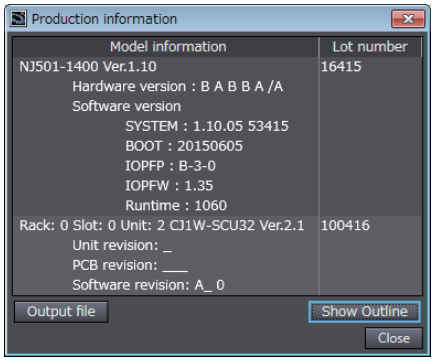

Detail View

The information that is displayed is different for the Outline View and Detail View. The Detail View displays the unit version, hardware version, and software versions. The Outline View displays only the unit version.

Note The hardware revision is separated "/" and displayed on the right of the hardware version. The hardware revision is not displayed for the Unit that the hardware revision is in blank.

● Checking the Unit Version of an EtherCAT Slave

You can use the Production Information while the Sysmac Studio is online to check the unit version of an EtherCAT slave.
Use the following procedure to check the unit version.

1 Double-click **EtherCAT** under **Configurations and Setup** in the Multiview Explorer. Or, right-click **EtherCAT** under **Configurations and Setup** and select **Edit** from the menu.
The EtherCAT Tab Page is displayed.

2 Right-click the master on the EtherCAT Tab Page and select **Display Production Information**.
The Production Information Dialog Box is displayed.
The unit version is displayed after “Rev.”

● Changing Information Displayed in Production Information Dialog Box

1 Click the **Show Detail** or **Show Outline** Button at the lower right of the Production Information Dialog Box.
The view will change between the production information details and outline.

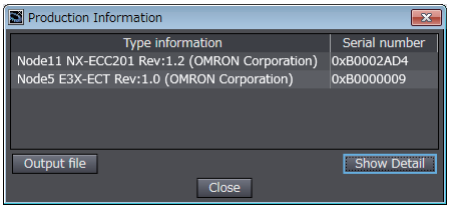

Outline View

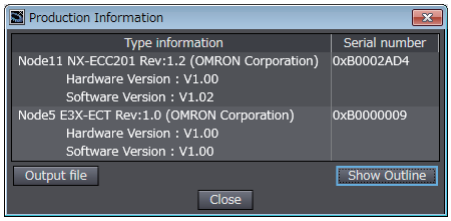

Detail View

Unit Versions of CPU Units and Sysmac Studio Versions

The functions that are supported depend on the unit version of the NJ-series CPU Unit. The version of Sysmac Studio that supports the functions that were added for an upgrade is also required to use those functions.
Refer to *A-7 Version Information* on page A-129 for the relationship between the unit versions of the CPU Units and the Sysmac Studio versions, and for the functions that are supported by each unit version.

Related Manuals

The followings are the manuals related to this manual. Use these manuals for reference.

Manual name	Cat. No.	Model numbers	Application	Description
NJ-series CPU Unit Hardware User's Manual	W500	NJ501-□□□□ NJ301-□□□□ NJ101-□□□□	Learning the basic specifications of the NJ-series CPU Units, including introductory information, designing, installation, and maintenance. Mainly hardware information is provided.	An introduction to the entire NJ-series system is provided along with the following information on the CPU Unit. • Features and system configuration • Introduction • Part names and functions • General specifications • Installation and wiring • Maintenance and inspection
NJ/NX-series CPU Unit Software User's Manual	W501	NX701-□□□□ NX502-□□□□ NX102-□□□□ NX1P2-□□□□ NJ501-□□□□ NJ301-□□□□ NJ101-□□□□	Learning how to program and set up an NJ/NX-series CPU Unit. Mainly software information is provided.	The following information is provided on a Controller built with an NJ/NX-series CPU Unit. • CPU Unit operation • CPU Unit features • Initial settings • Programming based on IEC 61131-3 language specifications
NJ/NX-series Instructions Reference Manual	W502	NX701-□□□□ NX502-□□□□ NX102-□□□□ NX1P2-□□□□ NJ501-□□□□ NJ301-□□□□ NJ101-□□□□	Learning detailed specifications on the basic instructions of an NJ/NX-series CPU Unit.	The instructions in the instruction set (IEC 61131-3 specifications) are described.
NJ/NX-series CPU Unit Motion Control User's Manual	W507	NX701-□□□□ NX502-□□□□ NX102-□□□□ NX1P2-□□□□ NJ501-□□□□ NJ301-□□□□ NJ101-□□□□	Learning about motion control settings and programming concepts.	The settings and operation of the CPU Unit and programming concepts for motion control are described.
NJ/NX-series Motion Control Instructions Reference Manual	W508	NX701-□□□□ NX502-□□□□ NX102-□□□□ NX1P2-□□□□ NJ501-□□□□ NJ301-□□□□ NJ101-□□□□	Learning about the specifications of the motion control instructions.	The motion control instructions are described.
NJ/NX-series CPU Unit Built-in EtherCAT® Port User's Manual	W505	NX701-□□□□ NX502-□□□□ NX102-□□□□ NX1P2-□□□□ NJ501-□□□□ NJ301-□□□□ NJ101-□□□□	Using the built-in EtherCAT port on an NJ/NX-series CPU Unit.	Information on the built-in EtherCAT port is provided. This manual provides an introduction and provides information on the configuration, features, and setup.
NJ/NX-series CPU Unit Built-in EtherNet/IP™ Port User's Manual	W506	NX701-□□□□ NX502-□□□□ NX102-□□□□ NX1P2-□□□□ NJ501-□□□□ NJ301-□□□□ NJ101-□□□□	Using the built-in EtherNet/IP port on an NJ/NX-series CPU Unit.	Information on the built-in EtherNet/IP port is provided. Information is provided on the basic setup, tag data links, and other features.

Manual name	Cat. No.	Model numbers	Application	Description
NJ/NX-series CPU Unit OPC UA User's Manual	W588	NX701-□□□□ NX502-□□□□ NX102-□□□□ NJ501-1□00	Using the OPC UA.	Describes the OPC UA.
NJ/NX-series Database Connection CPU Units User's Manual	W527	NX701-□□20 NX502-□□□□ NX102-□□20 NJ501-□□20 NJ101-□□20	Using the database connection service with NJ/NX-series Controllers.	Describes the database connection service.
NJ-series SECS/GEM CPU Units User's Manual	W528	NJ501-1340	Using the GEM Services with NJ-series Controllers.	Provides information on the GEM Services.
NJ-series Robot Integrated CPU Unit User's Manual	O037	NJ501-R□□□	Using the NJ-series Robot Integrated CPU Unit.	Describes the settings and operation of the CPU Unit and programming concepts for OMRON robot control.
Sysmac Studio Robot Integrated System Building Function with Robot Integrated CPU Unit Operation Manual	W595	SYSMAC-SE2□□□ SYSMAC-SE200D-64	Learning about the operating procedures and functions of the Sysmac Studio to configure Robot Integrated System using Robot Integrated CPU Unit.	Describes the operating procedures of the Sysmac Studio for Robot Integrated CPU Unit.
Sysmac Studio Robot Integrated System Building Function with IPC Application Controller Operation Manual	W621	SYSMAC-SE2□□□ SYSMAC-SE200D-64	Learning about the operating procedures and functions of the Sysmac Studio to configure Robot Integrated System using IPC Application Controller.	Describes the operating procedures of the Sysmac Studio for IPC Application Controller.
Sysmac Studio 3D Simulation Function Operation Manual	W618	SYSMAC-SE2□□□ SYSMAC-SA4□□□-64	Learning about an outline of the 3D simulation function of the Sysmac Studio and how to use the function.	Describes an outline, execution procedures, and operating procedures for the 3D simulation function of the Sysmac Studio.
NJ-series NJ Robotics CPU Unit User's Manual	W539	NJ501-4□□□ NJ501-R□□□	Controlling robots with NJ-series CPU Units.	Describes the functionality to control robots.
NJ/NY-series NC Integrated Controller User's Manual	O030	NJ501-5300 NY532-5400	Performing numerical control with NJ/NY-series Controllers.	Describes the functionality to perform the numerical control.
NJ/NY-series G code Instructions Reference Manual	O031	NJ501-5300 NY532-5400	Learning about the specifications of the G code/M code instructions.	The G code/M code instructions are described.
NJ/NX-series Troubleshooting Manual	W503	NX701-□□□□ NX502-□□□□ NX102-□□□□ NX1P2-□□□□ NJ501-□□□□ NJ301-□□□□ NJ101-□□□□	Learning about the errors that may be detected in an NJ/NX-series Controller.	Concepts on managing errors that may be detected in an NJ/NX-series Controller and information on individual errors are described.
Sysmac Studio Version 1 Operation Manual	W504	SYSMAC -SE2□□□	Learning about the operating procedures and functions of the Sysmac Studio.	Describes the operating procedures of the Sysmac Studio.

Manual name	Cat. No.	Model numbers	Application	Description
CNC Operator Operation Manual	O032	SYSMAC-RTNC0□□□D	Learning an introduction of the CNC Operator and how to use it.	An introduction of the CNC Operator, installation procedures, basic operations, connection operations, and operating procedures for main functions are described.
NX-series EtherCAT® Coupler Unit User's Manual	W519	NX-ECC□□□	Learning how to use the NX-series EtherCAT Coupler Unit and EtherCAT Slave Terminals.	The following items are described: the overall system and configuration methods of an EtherCAT Slave Terminal (which consists of an NX-series EtherCAT Coupler Unit and NX Units), and information on hardware, setup, and functions to set up, control, and monitor NX Units through EtherCAT.
NA-series Programmable Terminal Software User's Manual	V118	NA5-□□W□□□□ (-V□)	Learning about NA-series PT pages and object functions.	Describes the pages and object functions of the NA-series Programmable Terminals.
NS-series Programmable Terminals Programming Manual	V073	NS15-□□□□□ NS12-□□□□□ NS10-□□□□□ NS8-□□□□□ NS5-□□□□□	Learning how to use the NS-series Programmable Terminals.	Describes the setup methods, functions, etc. of the NS-series Programmable Terminals.

Terminology

Term	Description
AT	One of the attributes of a variable. This attribute allows the user to specify what is assigned to a variable. An I/O port or an address in memory used for CJ-series Units can be specified.
CJ-series Unit	Any of the CJ-series Units that can be used with an NJ-series Controller.
memory used for CJ-series Units	One type of I/O memory that contains addresses to which variables can be assigned, for example, when accessing a CJ-series Unit or CJ-series network. It can be accessed only with variables with an AT attribute.
CPU Unit	The Unit that serves as the center of control for a Machine Automation Controller. The CPU Unit executes tasks, refreshes I/O for other Units and slaves, etc. The NJ/NX-series CPU Units include the NX701-□□□□, NX102-□□□□, NX1P2-□□□□, NJ501-□□□□.
EtherCAT Master Function Module	One of the function modules. This function module controls the EtherCAT slaves as the EtherCAT master.
EtherNet/IP Function Module	One of the function modules. This function module controls the built-in EtherNet/IP port.
FB	An acronym for "function block."
FUN	An abbreviation for "function."
I/O port	A logical interface that is used by the CPU Unit to exchange data with an external device (slave or Unit).
I/O map settings	Settings that assign variables to I/O ports. Assignment information between I/O ports and variables.
I/O refreshing	Cyclic data exchange with external devices that is performed with predetermined memory addresses.
MC Test Run	A function to check motor operation and wiring from the Sysmac Studio.
NX bus	The NX-series internal bus. An NX1P2 CPU Unit has the NX bus.
NX Units	Any of the NX-series Units that perform I/O processing with connected external devices. The Communications Coupler Units are not included with the NX Units.
PDO communications	An abbreviation for process data communications. Data is exchanged between the master and slaves on a process data communications cycle. (The process data communications cycle is the same as the task period of the primary periodic task.)
PLC Function Module	One of the function modules. This function module executes the user program, sends commands to the Motion Control Function Module, and provides an interface to the USB and SD Memory Card.
POU	An acronym for "program organization unit". A POU is a unit in a program execution model that is defined in IEC 61131-3. A POU contains an algorithm and a local variable table and forms the basic unit used to build a user program. There are three types of POUs: programs, functions, and function blocks.
SDO communications	One type of EtherCAT communications in which service data objects (SDOs) are used to transmit information whenever required.
Sysmac Studio	A computer software application for setting, programming, debugging, and troubleshooting NJ/NX-series Controllers. It also provides operations for motion control and a Simulator.
upload	To transfer data from the Controller to the Sysmac Studio with the synchronization operation of the Sysmac Studio.

Term	Description
information	One of the event levels for Controller events or user-defined events. These are not errors, but appear in the event log to notify the user of specific information.
Event Setup	Settings that define user-defined errors and user-defined information.
event task	A task that executes a user program only once when the task execution conditions are met.
event log	A function that recognizes and records errors and other events.
inline ST	ST programming that is included within a ladder diagram.
edge	One of the attributes of a variable. This attribute makes a BOOL variable pass TRUE to a function block when the variable changes from FALSE to TRUE or when it changes from TRUE to FALSE.
cam data variable	A variable that represents the cam data as a structure array. A cam data variable is an array structure that consists of phases and displacements.
observation	One of the event levels for Controller events or user-defined events. These are minor errors that do not affect control operations, but appear in the event log to notify the user of specific information.
function module	One of the functional units of the software configuration of the CPU Unit.
basic data type	Any of the data types that are defined by IEC 61131-3. They include Boolean, bit string, integer, real, duration, date, time of day, date and time, and text string data types. "Basic data type" is used as opposed to derivative data types, which are defined by the user.
forced refreshing	Forcing the refreshing of an input from an external device or an output to an external device, e.g., when the user debugs a program. Addresses that are subject to forced refreshing can still be overwritten from the user program.
union	One of the derivative data types. It allows you to handle the same data as different data types.
global variable	A variable that can be read or written from all POUs (programs, functions, and function blocks).
minor fault level Controller error	An error for which some of the control operations for one of the function modules in the NJ/NX-series Controller stop. An NJ/NX-series CPU Unit continues operation even after a minor fault level Controller error occurs.
Special Unit Setup	A generic term for the settings for a Special Unit, including the settings in allocated DM Area words.
structure	One of the derivative data types. It consists of multiple data types placed together into a layered structure.
Constant	One of the attributes of a variable. If you specify the Constant attribute for a variable, the value of the variable cannot be written by any instructions, ST operators, or CIP message communications.
Controller	The range of devices that are directly controlled by the CPU Unit. In the NX-series System, the Controller includes the CPU Rack and EtherCAT slaves (including general-purpose slaves and Servo Drives). In the NJ-series System, the Controller includes the CPU Rack, Expansion Racks, and EtherCAT slaves (including general-purpose slaves and Servo Drives).

Term	Description
Controller error	Errors that are defined by the NJ/NX-series System. “Controller error” is a collective term for major fault level, partial fault level, minor fault level, and observation Controller events.
Controller event	One of the events in the NJ/NX-series System. Controller events are errors and information that are defined by the system for user notification. A Controller event occurs when the system detects a factor that is defined as a Controller event.
Controller information	Information that is defined by the NJ/NX-series System that is not an error. It represents an information Controller event.
Servo Drive/encoder input slave	Any of the EtherCAT slaves that is assigned to an axis. In the NJ/NX-series System, it would be a Servo Drive or Encoder Input Slave Unit.
axis	A functional unit within the Motion Control Function Module. An axis is assigned to the drive mechanism in an external Servo Drive or the sensing mechanism in an external Encoder Input Slave Unit.
axes group	A functional unit that groups together axes within the Motion Control Function Module.
Axes Group Variable	A system-defined variable that is defined as a structure and provides status information and some of the axes parameters for an individual axes group. An Axes Group Variable is used to specify an axes group for motion control instructions and to monitor the command interpolation velocity, error information, and other information for the axes group.
Axis Variable	A system-defined variable that is defined as a structure and provides status information and some of the axis parameters for an individual axis. An Axis Variable is used to specify an axis for motion control instructions and to monitor the command position, error information, and other information for the axis.
system common processing	System processing that is performed by the CPU Unit to perform I/O refreshing and the user program execution within a task. Exclusive control of variables between tasks, data trace processing, and other processing is performed.
system service	Processing that is performed by the CPU Unit in unused time between task processing. The system service includes communications processing, SD Memory Card access processing, self-diagnosis processing, and other processing.
system-defined variable	A variable for which all attributes are defined by the system and cannot be changed by the user.
Initial Value	One of the attributes of a variable. The variable is set to the initial value in the following situations. • When power is turned ON • When the CPU Unit changes to RUN mode • When you specify to initialize the values when the user program is transferred • When a major fault level Controller error occurs
slave	A device that performs remote I/O for a master.
Slave Terminal	A building-block remote I/O terminal to which a Communications Coupler Unit and NX Units are mounted. A Slave Terminal is one type of slave.
slave and Unit configurations	A generic term for the EtherCAT configuration and Unit configuration.
absolute encoder home offset	This data is used to restore in the CPU Unit the actual position of a Servo Drive with an absolute encoder. The offset is the difference between the command position after homing and the absolute data that is read from the absolute encoder.
project unit version	A unit version to be set for the project. It is set for the project in the Select Device Area of the Project Properties Dialog Box on the Sysmac Studio.

Term	Description
major fault level Controller error	An error for which all NJ/NX-series Controller control operations stop. The CPU Unit immediately stops user program execution and turns OFF the loads for all slaves and Units (including remote I/O).
download	To transfer data from the Sysmac Studio to the Controller with the synchronization operation of the Sysmac Studio.
task	An attribute that defines when a program is executed.
task period	The interval at which the primary periodic task or a periodic task is executed.
Communications Coupler Unit	The generic name of an interface unit for remote I/O communications on a network between NX Units and a host network master. For example, an EtherCAT Coupler Unit is a Communications Coupler Unit for an EtherCAT network.
periodic task	A tasks for which user program execution and I/O refreshing are performed each period.
device	A general term for any Unit or slave that is refreshed by the I/O refreshing that is performed by the CPU Unit. Specifically, it refers to EtherCAT slaves, NX Units on the CPU Unit, built-in I/O, Option Boards, and CJ-series Units.
device output	An output for any Unit or slave that is refreshed by the I/O refreshing that is performed by the CPU Unit.
device variable	A variable that is used to access a specific device through an I/O port.
synchronization	A function that automatically compares the information in the NJ/NX-series Controller with the information in the Sysmac Studio, displays any differences and locations in a hierarchical form, and can be used to synchronize the information.
namespace	A system that is used to group and nest the names of functions, function block definitions, and data types.
Network Publish	One of the attributes of a variable. This attribute allows you to use CIP message communications or tag data links to read/write variables from another Controller or from a host computer.
array specification	One of the variable specifications. An array variable contains multiple elements of the same data type. The elements in the array are specified by serial numbers called subscripts that start from the beginning of the array.
derivative data type	A data type that is defined by the user. Structures, unions, and enumerations are derivative data types.
Range Specification	One of the variable specifications. You can specify a range for a variable in advance. The variable can take only values that are in the specified range.
general-purpose slave	Any of the EtherCAT slaves that cannot be assigned to an axis.
function	A POU that is used to create an object that determines a unique output for the same input, such as for data processing.
function block	A POU that is used to create an object that can have a different output for the same input, such as for a timer or counter.
partial fault level Controller error	An error for which all of the control operations for one of the function modules in the NJ/NX-series Controller stop. An NJ/NX-series CPU Unit continues operation even after a partial fault level Controller error.
primary periodic task	The task with the highest priority.
program	Along with functions and function blocks, one of the three types of POUs. Programs are assigned to tasks to execute them.
process data communications	One type of EtherCAT communications in which process data objects (PDOs) are used to exchange information cyclically and in realtime. Process data communications are also called PDO communications.

Term	Description
variable	A representation of data, such as a numeric value or character string, that is used in a user program. You can change the value of a variable by assigned the required value. “Variable” is used as opposed to “constant,” for which the value does not change.
variable memory	A memory area that contains the present values of variables that do not have AT specifications. It can be accessed only with variables without an AT attribute.
Retain	One of the attributes of a variable. The values of variables with a Retain attribute are held at the following times. (Variables without a Retain attribute are set to their initial values.) • When power is turned ON after a power interruption • When the CPU Unit changes to RUN mode • When you specify to not initialize the values when the user program is transferred
instruction	The smallest unit of the processing elements that are provided by OMRON for use in POU algorithms. There are ladder diagram instructions (program inputs and outputs), function instructions, function block instructions, and ST statements.
main memory	The memory inside the CPU Unit that is used by the CPU Unit to execute the OS and user program.
Motion Control Function Module	One of the function modules. The MC Function Module performs motion control based on commands from the motion control instructions that are executed in the user program.
motion control instruction	A function block instruction that executes motion control. The Motion Control Function Module supports instructions that are based on function blocks for PLCopen® motion control as well as instructions developed specifically for the Motion Control Function Module.
user-defined event	One of the events in the NJ/NX-series System. These events are defined by the user. “User-defined events” is a generic term for user-defined errors and user-defined information.
user-defined variable	A variable for which all of the attributes are defined by the user and can be changed by the user.
user program	All of the programs in one project.
Unit	A device that mounts to the CPU Rack or an Expansion Rack. In NJ-series manuals, it refers to CJ-series Units.
Unit configuration	The configuration information for the Units that are set on the Sysmac Studio. This information tells what Unit models are connected to the CPU Unit and where they are connected.
literal	A constant expression that is used in a user program.
enumeration	One of the derivative data types. This data type takes one item from a prepared name list of enumerators as its value.
enumerator	One of the values that an enumeration can take expressed as a character string. The value of an enumeration is one of the enumerators.
local variable	A variable that can be accessed only from inside the POU in which it is defined. “Local variable” is used as opposed to “global variable.” Local variables include internal variables, input variables, output variables, in-out variables, and external variables.

Revision History

A manual revision code appears as a suffix to the catalog number on the front and back covers of the manual.

Revision code	Date	Revised content
01	July 2011	Original production
02	March 2012	• Added information on the NJ301-□□□□. • Added information on the functions supported by unit version 1.01 of the CPU Units. • Corrected mistakes.
03	May 2012	• Made changes accompanying release of unit version 1.02 of the CPU Unit.
04	August 2012	• Made changes accompanying release of unit version 1.03 of the CPU Unit.
05	February 2013	• Made changes accompanying release of unit version 1.04 of the CPU Unit.
06	April 2013	• Added information on the NJ501-1□20. • Made changes accompanying release of unit version 1.05 of the CPU Unit.
07	June 2013	• Made changes accompanying release of unit version 1.06 of the CPU Unit.
08	September 2013	• Made changes accompanying release of unit version 1.07 of the CPU Unit.
09	December 2013	• Made changes accompanying release of unit version 1.08 of the CPU Unit.
10	July 2014	• Corrected mistakes.
11	January 2015	• Made changes accompanying release of unit version 1.10 of the CPU Unit. • Corrected mistakes.
12	April 2015	• Added information on the NJ101-□□□□. • Corrected mistakes.
13	October 2015	• Added information on the hardware revision. • Corrected mistakes.
14	April 2016	• Made changes accompanying release of unit version 1.11 of the CPU Unit.
15	October 2016	• Made changes accompanying release of unit version 1.13 of the CPU Unit.
16	April 2017	• Made changes accompanying release of unit version 1.14 of the CPU Unit.
17	June 2017	• Made changes accompanying release of unit version 1.15 of the CPU Unit.

Revision code	Date	Revised content
18	October 2017	• Made changes accompanying release of unit version 1.16 of the CPU Unit.
19	January 2018	• Made changes accompanying release of unit version 1.17 of the CPU Unit.
20	April 2018	• Corrected mistakes.
21	July 2018	• Added information on the hardware revision. • Made changes accompanying release of unit version 1.19 of the CPU Unit. • Made changes accompanying the transfer of explanation for event codes and errors to the *NJ/NX-series Troubleshooting Manual*.
22	January 2019	• Made changes accompanying release of unit version 1.20 of the CPU Unit. • Corrected mistakes.
23	April 2019	• Made changes accompanying release of unit version 1.21 of the NJ501-1□00, NJ301-□□□□, and NJ101-□□00
24	July 2019	• Made changes accompanying release of unit version 1.40 of the NJ501-1□00, NJ301-□□□□, and NJ101-□□00. • Made changes accompanying release of unit version 1.21 of the NJ501-4□00, NJ501-4□10, NJ501-1340, and NJ501- 5300.
25	August 2020	• Added information on the NJ501-R□□□.
26	October 2020	• Corrected mistakes.
27	January 2021	• Made changes accompanying release of unit version 1.43 of the NJ501-1□00.
28	July 2021	• Made changes accompanying release of unit version 1.46 of the NJ501-1□00, NJ301-□□□□, NJ101-□□00, and NJ501-R□□□. • Made changes accompanying release of unit version 1.26 of the NJ501-□□20, NJ501-1340, NJ501-5300, NJ501-4□□□, and NJ101-1□20. • Made changes on the information of the SD Memory Card.
29	November 2021	• Added information on the hardware revision D.
30	April 2022	• Added information to Terms and Conditions Agreement.
31	June 2022	• Made changes accompanying the addition of OTAX connectors. • Changed description on accuracy of internal clock. • Added descriptions on the DIP switch.
32	July 2022	• Revisions for adding safety precautions regarding security. • Corrected mistakes.
33	November 2022	• Made changes accompanying release of unit version 1.60 of the CPU Unit.
34	October 2023	• Changed description of OPC UA server in specifications.
35	October 2024	• Made changes accompanying release of unit version 1.67 of the CPU Unit.
36	January 2025	• Added information on the CJ1W-OA201-1.
37	July 2025	• Made changes accompanying release of unit version 1.69 of the CPU Unit. • Added information related to precautions for safe use.
38	October 2026	• Corrected mistakes.

1

Introduction to NJ-series Controllers

This section describes the features, basic system configuration, specifications, and overall operating procedure of an NJ-series Controller.

1-1 The NJ-series Controllers 1-2
1-1-1 Features 1-2
1-1-2 Introduction to the System Configurations 1-4
1-2 Specifications 1-8
1-3 Overall Operating Procedure for the NJ-series Controller 1-13
1-3-1 Overall Procedure 1-13
1-3-2 Procedure Details 1-14

1-1 The NJ-series Controllers

The SYSMAC NJ-series Controllers are next-generation machine automation controllers that provide the functionality and high-speed performance that are required for machine control. They provide the safety, reliability, and maintainability that are required of industrial controllers.
The NJ-series Controllers provide the functionality of previous OMRON PLCs, and they also provide the functionality that is required for motion control. Synchronized control of I/O devices on high-speed EtherCAT can be applied to safety devices, vision systems, motion equipment, discrete I/O, and more.
OMRON offers the new Sysmac Series of control devices designed with unified communications specifications and user interface specifications. The NJ-series Machine Automation Controllers are part of the Sysmac Series. You can use them together with EtherCAT slaves, other Sysmac products, and the Sysmac Studio Automation Software to achieve optimum functionality and ease of operation.
With a system that is created from Sysmac products, you can connect components and commission the system through unified concepts and usability.

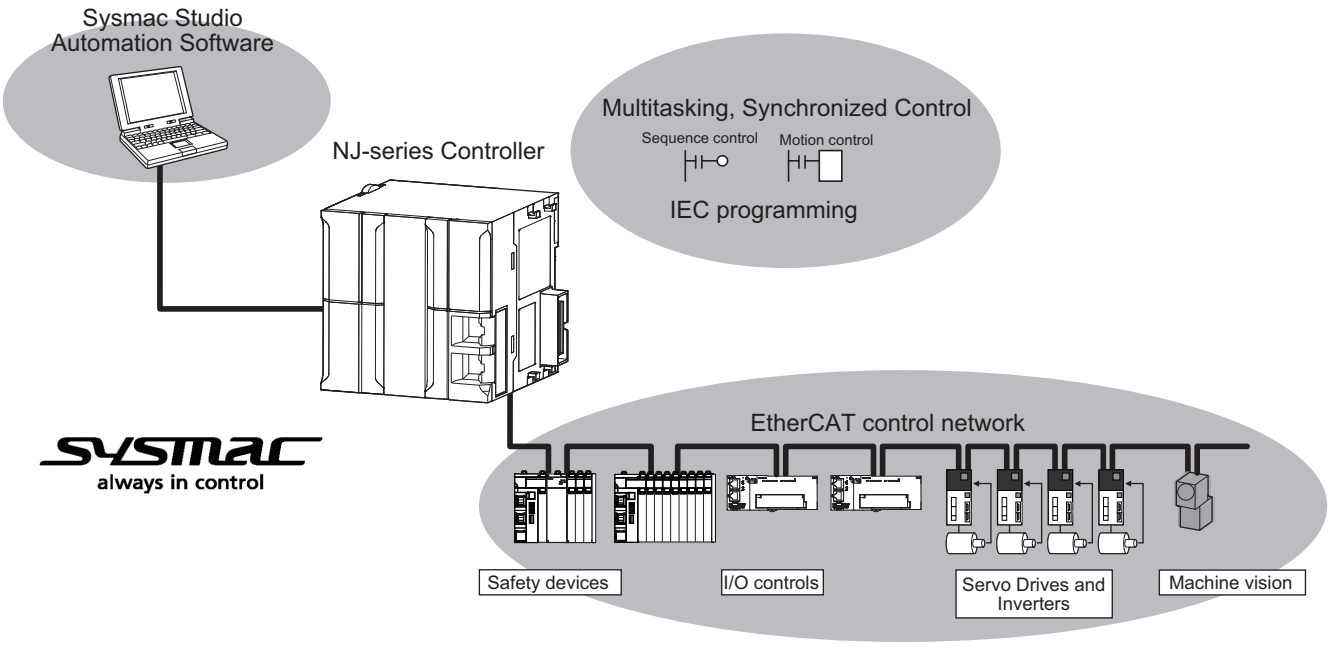

1-1-1 Features

Hardware Features

● Standard-feature EtherCAT Control Network Support

All CPU Units provide an EtherCAT master port for EtherCAT communications.
EtherCAT is an advanced industrial network system that achieves faster, more-efficient communications. It is based on Ethernet. Each node achieves a short fixed communications cycle time by transmitting Ethernet frames at high speed.
The standard-feature EtherCAT control network allows you to connect all of the devices required for machine control (e.g., I/O systems, Servo Drives, Inverters, and machine vision) to the same network.

Support for EtherCAT Slave Terminals

You can use EtherCAT Slave Terminals to save space. You can also flexibly build systems with the wide variety of NX Units.

Achieving a Safety Subsystem on EtherCAT

You can use NX-series Safety Control Units to integrate safety controls in a sequence and motion control system as a subsystem on EtherCAT.

Version Information

A CPU Unit with unit version 1.06 or later and Sysmac Studio version 1.07 or higher are required to use the NX-series Safety Control Units.

CJ-series Units

In addition to EtherCAT network slaves, you can also mount CJ-series Basic I/O Units and Special Units on the I/O bus.

Standard-feature EtherNet/IP Communications Port

All CPU Units provide an EtherNet/IP port for EtherNet/IP communications.
EtherNet/IP is a multivendor industrial network that uses Ethernet. You can use it for networks between Controllers or as a field network. The use of standard Ethernet technology allows you to connect to many different types of general-purpose Ethernet devices.

Standard-feature USB Port

You can connect the computer that runs the Support Software directly to the CPU Unit.

Standard-feature SD Memory Card Slot

You can access an SD Memory Card that is mounted in the CPU Unit from the user program.

Highly Reliable Hardware

The NJ-series Controllers provide the hardware reliability and RAS functions that you expect of a PLC.

Software Features

Integrated Sequence Control and Motion Control

An NJ-series CPU Unit can perform both sequence control and motion control. You can simultaneously achieve both sequence control and multi-axes synchronized control. Sequence control, motion control, and I/O refreshing are all executed in the same control period.
The same control period is also used for the process data communications cycle for EtherCAT. This enables precise sequence and motion control in a fixed period with very little deviation.

Multitasking

You assign I/O refreshing and programs to tasks and then specify execution conditions and execution order for them to flexibly combine controls that suit the application.

● Programming Languages Based on the IEC 61131-3 International Standard

The NJ-series Controllers support language specifications that are based on IEC 61131-3. To these, OMRON has added our own improvements. Motion control instructions that are based on PLCopen® standards and an instruction set (POUs) that follows IEC rules are provided.

● Programming with Variables to Eliminate Worrying about the Memory Map

You access all data through variables in the same way as for the advanced programming languages that are used on computers. Memory in the CPU Unit is automatically assigned to the variables that you create so that you do not have to remember the physical addresses.

● A Wealth of Security Features

The many security features of the NJ-series Controllers include operation authority settings and restriction of program execution with IDs.

● Complete Controller Monitoring

The CPU Unit monitors events in all parts of the Controller, including mounted Units and EtherCAT slaves.
Troubleshooting information for errors is displayed on the Sysmac Studio or on an NS-series PT. Events are also recorded in logs.

● Sysmac Studio Automation Software

The Sysmac Studio provides an integrated development environment that covers not only the Controller, but also covers peripheral devices and devices on EtherCAT. You can use consistent procedures for all devices regardless of the differences in the devices. The Sysmac Studio supports all phases of Controller application, from designing through debugging, simulations, commissioning, and changes during operation.

● A Wealth of Simulation Features

The many simulation features include execution, debugging, and task execution time estimates on a virtual controller.

1-1-2 Introduction to the System Configurations

The NJ Series supports the following system configurations.

● Basic System Configurations

The NJ-series basic configurations include the EtherCAT network configuration, CJ-series Unit configuration, and the Support Software.

- EtherCAT Network Configuration
  You can use the built-in EtherCAT port to connect to EtherCAT Slave Terminals, to general-purpose slaves for analog and digital I/O, and to Servo Drives and encoder input slaves. An EtherCAT network configuration enables precise sequence and motion control in a fixed cycle with very little deviation.
- CJ-series Unit Configuration
  In addition to the EtherCAT network, you can mount CJ-series Basic I/O Units and Special Units. CJ-series Units can be mounted both to the CPU Rack where the CPU Unit is mounted and to Expansion Racks.

- Support Software
  The Support Software is connected to the peripheral USB port on the CPU Unit with a commercially available USB cable. You can also connect it through an Ethernet cable that is connected to the built-in EtherNet/IP port.
  Refer to *3-7-2 Connection* on page 3-34 for details on the connection configuration of the Support Software.

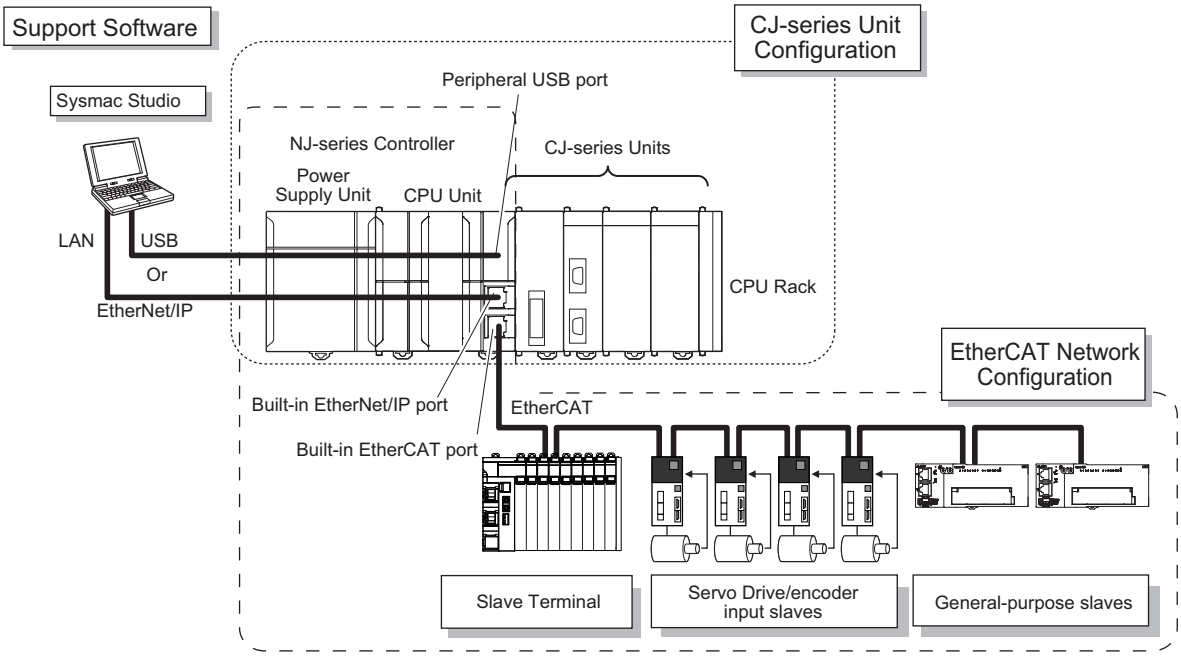

Additional Information

You can connect the Sysmac Studio directly to the Communications Coupler Unit to set up the Slave Terminal. Refer to the *NX-series EtherCAT Coupler Unit User's Manual (Cat. No. W519)* for details.

Network Configurations

- Host computers, HMIs, and other NJ-series Controllers are connected to the EtherNet/IP port built-in the CPU Unit or to an EtherNet/IP Unit (CJ1W-EIP21 or CJ1W-EIP21S).
- A DeviceNet network is connected to a DeviceNet Unit. A serial communications network is connected to a Serial Communications Unit.

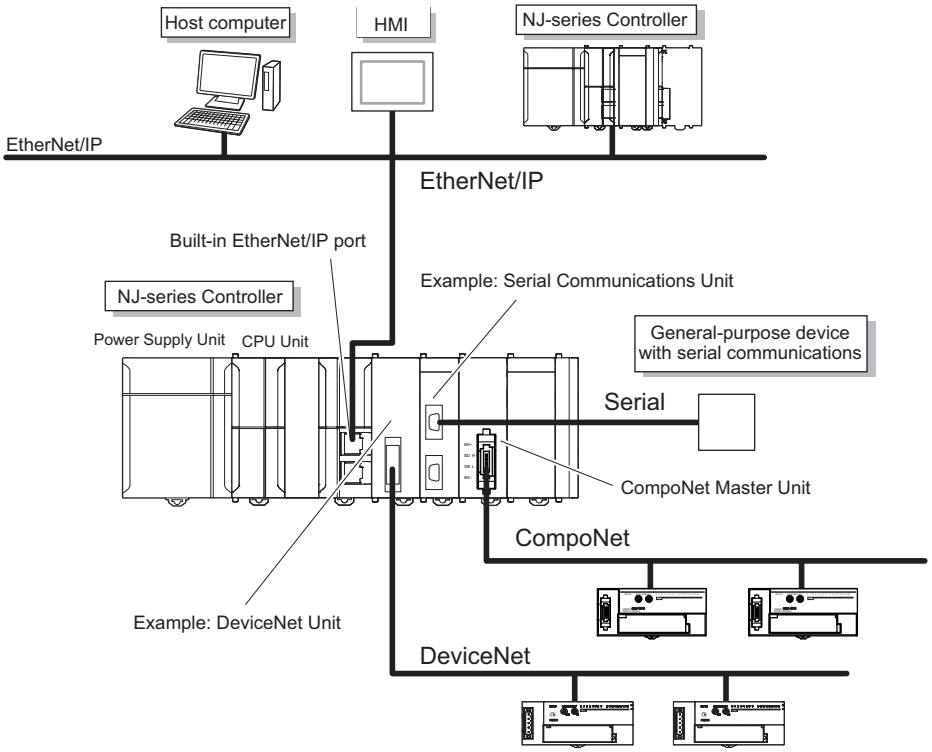

Refer to the *NJ/NX-series CPU Unit Software User's Manual (Cat. No. W501)* for details on the network configuration.

Version Information

- The CJ1W-EIP21 can be mounted on the NJ-series CPU Unit in the following combinations.
  a) CJ1W-EIP21: Unit version 2.1 or later
  b) NJ-series CPU Unit: Unit version 1.01 or later
  c) Sysmac Studio: Version 1.02 or higher
- The CJ1W-EIP21S can be mounted on the NJ-series CPU Unit in the following combinations.
  a) CJ1W-EIP21S: Lot. number: 241001□ or later
  b) NJ-series CPU Unit: Unit version 1.67 or later
  c) Sysmac Studio: Version 1.60 or higher

Support Software

You can use the following Support Software to set up, monitor, and debug an NJ-series Controller.

- Sysmac Studio
  The Sysmac Studio is the main Support Software that you use for an NJ-series Controller. On it, you can set up the Controller configurations, parameters, and programs, and you can debug and simulate operation.
- Other Support Software
  The following Support Software is also included in the Sysmac Studio Software Package Standard Edition.

Configuration software	Application
Sysmac Studio	The Sysmac Studio is used for sequence control, motion control, and all other operations except those described below.
Network Configurator	The Network Configurator is used for tag data links on EtherNet/IP ports or Units.*1
CX-Integrator	The CX-Integrator is used for remote I/O communications with a DeviceNet Unit or CompoNet Master Unit.
CX-Protocol	The CX-Protocol is used for protocol macros with Serial Communications Units.
CX-Designer	The CX-Designer is used to create screens for NS-series PTs.

*1. If the NJ/NX-series Controller is a target device, you may also use Sysmac Studio version 1.10 or higher. Use the Network Configurator if a CS/CJ-series PLC operates as the originator device.

1-2 Specifications

This section gives the main specifications of the NJ-series Controllers.

Item				NJ501-			NJ301-		NJ101-	
				□5□□	□4□□	□3□□	12□□	11□□	10□□	90□□
Processing time	Instruction execution times	LD instruction		1.2 ns (1.9 ns or less)*1			2.0 ns (3.0 ns or less)*2		3.3 ns (5.0 ns or less)*3	
		Math instructions (for long real data)		26 ns or more*4			42 ns or more*5		70 ns or more*6	
Programming	Program capacity*7	Size		20 MB			5 MB		3 MB	
		Quantity	Number of POU definitions	3,000			750		450	
			Number of POU instances	9,000 (*)			3,000 (*)		1,800	
	Memory capacity for variables	Retain attributes*8	Size	2 MB			0.5 MB			
			Number of variables	10,000			5,000 (*)			
		No Retain attributes*9	Size	4 MB			2 MB			
			Number of variables	180,000 (*)			90,000 (*)		22,500	
	Data types	Number of data types		2,000			1,000			
	Memory for CJ-series Units (Can be specified with AT specifications for variables.)	CIO Area		6,144 words (CIO 0 to CIO 6143)						
		Work Area		512 words (W0 to W511)						
		Holding Area		1,536 words (H0 to H1535)						
		DM Area		32,768 words (D0 to D32767)						
		EM Area		32,768 words × 25 banks (E0_00000 to E18_32767)			32,768 words × 4 banks (E0_00000 to E3_32767)			

Item				NJ501-			NJ301-		NJ101-	
				□5□□	□4□□	□3□□	12□□	11□□	10□□	90□□
Motion control	Number of controlled axes*10	Maximum number of controlled axes		64 axes	32 axes	16 axes	15 axes (*)		6 axes	---
			Motion control axes	64 axes	32 axes	16 axes	15 axes (*)		6 axes	---
			Single-axis position control axes	---						
		Maximum number of used real axes		64 axes	32 axes	16 axes	8 axes	4 axes	2 axes	---
			Used motion control servo axes	64 axes	32 axes	16 axes	8 axes	4 axes	2 axes	---
			Used single-axis position control servo axes	---						
		Maximum number of axes for linear interpolation axis control		4 axes per axes group						---
		Number of axes for circular interpolation axis control		2 axes per axes group						---
	Maximum number of axes groups			32 axes groups						---
	Motion control period			The same control period as that is used for the process data communications cycle for EtherCAT.						---
	Cams	Number of cam data points	Maximum points per cam table	65,535 points						---
			Maximum points for all cam tables	1,048,560 points			262,140 points			---
		Maximum number of cam tables		640 tables			160 tables			---
	Position units			Pulse, mm, μm, nm, degree, and inch						---
	Override factors			0.00% or 0.01% to 500.00%						---
Peripheral USB port	Supported services			Sysmac Studio connection						
	Physical layer			USB 2.0-compliant B-type connector						
	Transmission distance			5 m max.						
Built-in EtherNet/IP port	Number of ports			1						
	Physical layer			10BASE-T/100BASE-TX						
	Frame length			1,514 bytes max.						
	Media access method			CSMA/CD						
	Modulation			Baseband						
	Topology			Star						
	Baud rate			100 Mbps (100Base-TX)						

Item				NJ501-			NJ301-		NJ101-	
				□5□□	□4□□	□3□□	12□□	11□□	10□□	90□□
	Transmission media			STP (shielded, twisted-pair) cable of Ethernet category 5, 5e or higher						
	Maximum transmission distance between Ethernet switch and node			100 m						
	Maximum number of cascade connections			There are no restrictions if an Ethernet switch is used.						
	CIP service: Tag data links (cyclic communications)	Maximum number of connections		32						
		Packet interval*11		Can be set for each connection. 1 to 10,000 ms in 1-ms increments (*)						
		Permissible communications band		3,000 pps*12 (including heartbeat) (*)						
		Maximum number of tag sets		32						
		Tag types		Network variables, CIO, Work, Holding, DM, and EM Areas						
		Number of tags per connection (i.e., per tag set)		8 (7 tags if Controller status is included in the tag set.)						
		Maximum number of tags		256						
		Maximum link data size per node (total size for all tags)		19,200 bytes						
		Maximum data size per connection		600 bytes						
		Maximum number of registrable tag sets		32 (1 connection = 1 tag set)						
		Maximum tag set size		600 bytes (Two bytes are used if Controller status is included in the tag set.)						
		Multi-cast packet filter*13		Supported						
	CIP message service: Explicit messages	Class 3 (number of connections)		32 (clients plus server)						
		UCMM (non-connection type)	Maximum number of clients that can communicate at one time	32						
			Maximum number of servers that can communicate at one time	32						
	Number of TCP sockets			30 (*)						
	OPC UA server			*14						

Item				NJ501-			NJ301-		NJ101-	
				□5□□	□4□□	□3□□	12□□	11□□	10□□	90□□
Built-in EtherCAT port	Communications standard			IEC 61158 Type12						
	EtherCAT master specifications			Class B (Feature Pack Motion Control compliant)						
	Physical layer			100BASE-TX						
	Modulation			Baseband						
	Baud rate			100 Mbps (100Base-TX)						
	Duplex mode			Auto						
	Topology			Line, daisy chain, branching, and ring*15						
	Transmission media			Twisted-pair cable of category 5 or higher (double-shielded straight cable with aluminum tape and braiding)						
	Maximum transmission distance between nodes			100 m						
	Maximum number of slaves			192					64	
	Range of node addresses that can be set			1 to 192						
	Maximum process data size			Inputs: 5,736 bytes Outputs: 5,736 bytes *16						
	Maximum process data size per slave			Inputs: 1,434 bytes Outputs: 1,434 bytes						
	Communications cycle			500, 1,000, 2,000, or 4,000 μs (*)					1,000, 2,000, or 4,000 μs	
	Sync jitter			1 μs max.						
Serial communications	Communications method			---						
	Synchronization method			---						
	Baud rate			---						
Unit configuration	Maximum number of connectable Units	Maximum number of CJ Units per CPU Rack or Expansion Rack		10						
		Maximum number of NX Units per CPU Rack		---						
		Maximum number of CJ Units for entire controller		40						
		Maximum number of NX Units for entire controller		4,096 (On EtherCAT Slave Terminals)					400 (On EtherCAT Slave Terminals)	
	Maximum number of Expansion Racks			3						
	I/O capacity	Maximum number of I/O points on CJ-series Units		2,560						
	Power Supply Unit for CPU Rack and Expansion Racks	Model		NJ-P□3001						
		Power OFF detection time	AC power supply	30 to 45 ms						
			DC power supply	22 to 25 ms						
Option Board	Number of slots			---						

Item			NJ501-			NJ301-		NJ101-	
			□5□□	□4□□	□3□□	12□□	11□□	10□□	90□□
Built-in I/O	Input	Number of points	---						
	Output	Number of points	---						
		Load short-circuit protection	---						
Internal clock	Accuracy*17		At ambient temperature of 55°C: -4.5 to +4.5 min error per month At ambient temperature of 25°C: -3.5 to +3.5 min error per month At ambient temperature of 0°C: -4.5 to +4.5 min error per month						
	Retention time of built-in capacitor		---						

*1. When the hardware revision for the Unit is A or later, the processing time is 1.1 ns (1.7 ns or less).
*2. When the hardware revision for the Unit is A or later, the processing time is 1.6 ns (2.5 ns or less).
*3. When the hardware revision for the Unit is A or later, the processing time is 3.0 ns (4.5 ns or less).
*4. When the hardware revision for the Unit is A or later, the value is 24 ns or more.
*5. When the hardware revision for the Unit is A or later, the value is 35 ns or more.
*6. When the hardware revision for the Unit is A or later, the value is 63 ns or more.
*7. Execution objects and variable tables (including variable names)
*8. Does not include Holding, DM, and EM Area memory for CJ-series Units.
*9. Does not include CIO and Work Area memory for CJ-series Units.
*10. Refer to the *NJ/NX-series CPU Unit Motion Control User's Manual (Cat. No. W507)* for descriptions of axes.
*11. Data will be refreshed at the set interval, regardless of the number of nodes.
*12. "pps" means packets per second, i.e., the number of communications packets that can be sent or received in one second.
*13. As the EtherNet/IP port implements the IGMP client, unnecessary multi-cast packets can be filtered by using an Ethernet switch that supports IGMP Snooping.
*14. Refer to the *NJ/NX-series CPU Unit OPC UA User's Manual (Cat. No. W588)* for information on the specifications for the OPC UA server.
*15. A ring topology can be used with project unit version 1.40 or later.
*16. However, for project unit version earlier than 1.40, the data must be within four frames.
*17. The values shown are values in continuous operation.

Note Refer to *A-7 Version Information* on page A-129 for information on the notes for version upgrades.

1-3 Overall Operating Procedure for the NJ-series Controller

This section gives the overall operating procedure of the NJ-series Controllers and then describes it in more detail.

1-3-1 Overall Procedure

The overall procedure to use an NJ-series Controller is given below.

Step 1. Software Design	
	Design the overall system configuration, task configuration, programs, and variables.
	Step 1-1 Designing I/O and Processing
	Step 1-2 Designing Tasks
	Step 1-3 Designing Programs

↓

Step 2. Software Setups and Programming	
	Create the system configurations that you designed in step 1 on the Support Software and assign the variables. Create the tasks and programs, and debug them, e.g., with simulations.
	Step 2-1 Slave and Unit Configurations
	Step 2-2 Controller Setup
	Step 2-3 Programming
	Step 2-4 Offline Debugging

↓

Step 3. Mounting and Setting Hardware	
	Mount the Units and make the required hardware settings.

↓

Step 4. Wiring	
	Connect the network cables and wire the I/O.

↓

Step 5. Confirming Operation and Starting Actual System Operation	
	Connect the Support Software to the physical system and download the project. Check operation on the physical system and then start actual system operation.

1-3-2 Procedure Details

Step 1. Software Design

Step	Description	Reference
Step 1-1 Designing I/O and Processing	• External I/O devices and unit configuration • Refresh periods for external devices • Program contents	*Section 3 Configuration Units* on page 3-1
Step 1-2 Designing Tasks	• Task configuration • Relationship between tasks and programs • Task periods • Slave and Unit refresh times • Exclusive control methods for variables between tasks	*NJ/NX-series CPU Unit Software User's Manual (Cat. No. W501)*
Step 1-3 Designing Programs		
POU (Program Organization Unit) Design	• Programs • Functions and function blocks • Determining the algorithm languages	*NJ/NX-series CPU Unit Software User's Manual (Cat. No. W501)*
Variable Design	• Defining variables that you can use in more than one POU and variables that you use in only specific POUs • Defining the variables names for the device variables that you use to access slaves and Units • Defining the attributes of variables, such as the Name and Retain attributes • Designing the data types of variables	*NJ/NX-series CPU Unit Software User's Manual (Cat. No. W501)*

Step 2. Software Setups and Programming

Step	Description	Sysmac Studio Operations	Reference
Project Creation	1. Create a project in the Sysmac Studio. 2. Insert a Controller.	**New Project** Button **Insert** − **Controller**	*Sysmac Studio Version 1 Operation Manual (Cat. No. W504)*

The following *Controller Configurations and Setup* and the *Programming and Task Settings* can be performed in either order.

Step 2-1 Slave and Unit Configurations			
1) Creating the Slave and Unit Configurations	1. Creating the slave configuration and Unit configuration either offline or on-line. (For online configuration, make the online connection that is described in step 5.) 2. Setting up any Slave Terminals that are used.	EtherCAT Slave Setting Editor Unit Editor	*NJ/NX-series CPU Unit Software User's Manual (Cat. No. W501)* *NX-series EtherCAT Coupler Unit User's Manual (Cat. No. W519)*

2) Assigning Device Variables to I/O Ports	Registering device variables in variable tables (Variable names are user defined or automatically created.)	I/O Map	*NJ/NX-series CPU Unit Software User's Manual (Cat. No. W501)*

(The following step is for motion control.)

3) Creating the Axes and Assigning Them to the Servo Drive/Encoder Input Slaves	Creating the axes and setting them as real axes or virtual axes. Creating axes groups to perform interpolated axes control.	**Configurations and Setup** – **Motion Control Setup**	*NJ/NX-series CPU Unit Software User's Manual (Cat. No. W501)*

Step 2-2 Controller Setup	Setting the following parameters from the Sysmac Studio		*NJ/NX-series CPU Unit Software User's Manual (Cat. No. W501)*
	Setting the initial values for the PLC Function Module	**Configurations and Setup − Controller Setup** – **Operation Settings**	
	Initial settings for Special Units	**Configurations and Setup** – **CPU/ Expansion Racks**	
	(To use motion control) Setting the initial settings for the Motion Control Function Module	**Configurations and Setup** – **Motion Control Setup**	
	Setting the initial values for the EtherCAT Function Module	**Configurations and Setup** – **EtherCAT**	
	Setting the initial values for the EtherNet/IP Function Module	**Configurations and Setup − Controller Setup** − **Built-in EtherNet/IP Port Settings**	

Step 2-3 Programming			
1) Registering Variables	• Registering the variables used by more than one POU in the global variable table with Sysmac Studio • Registering the local variable table for each program • Registering the local variable table for each function block and function	Global Variable Table Editor Local Variable Table Editor	*Sysmac Studio Version 1 Operation Manual (Cat. No. W504)* *NJ/NX-series CPU Unit Software User's Manual (Cat. No. W501)*
2) Writing Algorithms for POUs	Writing the algorithms for the POUs (programs, function blocks, and functions) in the required languages	Programming Editor	*NJ/NX-series CPU Unit Software User's Manual (Cat. No. W501)* *NJ/NX-series Instructions Reference Manual (Cat. No. W502)* and *NJ/NX-series Motion Control Instructions Reference Manual (Cat. No. W508)*
3) Setting the Tasks	Making task settings	Configurations and Setup − **Task Settings**	*NJ/NX-series CPU Unit Software User's Manual (Cat. No. W501)*

Step 2-4 Offline Debugging	Checking the algorithms and task execution times on the Simulator (virtual controller)		*NJ/NX-series CPU Unit Software User's Manual (Cat. No. W501)*

Step 3. Mounting and Setting Hardware

Step	Description	Reference
1. Mounting	• Connecting adjacent Units • Mounting to DIN Track	*4-3 Mounting Units* on page 4-10
2. Setting Hardware	• Setting the node addresses of the EtherCAT slaves • Setting unit numbers on the rotary switches on the front of the Special Units	Operation manuals for the EtherCAT slaves and Special Units

Step 4. Wiring

Step	Description	Reference
1. Connecting Ethernet Cable	• Connecting the built-in EtherCAT port • Connecting the built-in EtherNet/IP port	*4-4 Wiring* on page 4-28
2. Wiring I/O	• Wiring I/O to EtherCAT slaves • Wiring Basic I/O Units and Special Units	Operation manuals for EtherCAT Slave Units and *4-4 Wiring* on page 4-28
	• Checking wiring	*Sysmac Studio Version 1 Operation Manual (Cat. No. W504)*
3. Connecting the Computer That Runs the Sysmac Studio	• Connecting USB Cable • Connecting the built-in EtherNet/IP port	*Sysmac Studio Version 1 Operation Manual (Cat. No. W504)*

Step 5. Checking Operation and Starting Operation on the Actual System

Step	Description	Sysmac Studio Operations	Reference
1. Online Connection to Sysmac Studio and Project Download	Turn ON the power supply to the Controller and place the Sysmac Studio online. Then, download the project.*1 (Perform this step before you create the slave configuration or Unit configuration from the mounted Units in step 2-1.)	**Controller − Communications Setup** **Controller − Synchronization**	*NJ/NX-series CPU Unit Software User's Manual (Cat. No. W501)*

*1. Use the Synchronize Menu of the Sysmac Studio to download the project.

2. Operation Check on Controller	1. Check the wiring by using forced refreshing of real I/O from the I/O Map or Watch Tab Page. 2. For motion control, use the MC Test Run operations in PROGRAM mode to check the wiring. Then check the motor rotation directions for jogging, travel distances for relative positioning (e.g., for electronic gear settings), and homing operation. 3. Change the Controller to RUN mode and check the operation of the user program.	---	*NJ/NX-series CPU Unit Software User's Manual (Cat. No. W501)*

3. Actual Controller Operation	Start actual operation.	---	---

2

System Configuration

This section describes the basic system configuration and devices used for NJ-series Controllers.

2-1 Basic System Configuration 2-2
2-1-1 EtherCAT Network Configuration 2-4
2-1-2 CJ-series Unit Configuration 2-5
2-2 Connecting to the Sysmac Studio 2-21
2-3 Network Configuration 2-22

2-1 Basic System Configuration

System Configuration

An NJ-series Controller supports the following two types of configurations.

1. **Basic Configurations**
   The basic configurations include the CPU Unit and the Configuration Units that are controlled directly by the CPU Unit. There are two basic configurations.
   a) EtherCAT network configuration
   b) CJ-series Unit configuration
2. **Other Network Configurations**
   These are the configurations of the systems that are connected to the CPU Unit's built-in EtherNet/IP port and Communications Units.

● EtherCAT Network Configuration

With an NJ-series CPU Unit, you can use an EtherCAT network as a basic system.
With the EtherCAT network system of the NJ-series CPU Unit, the period for sequence processing and motion processing in the CPU Unit is the same as the EtherCAT communications period.
This enables high-precision sequence control and motion control with a constant period and little fluctuation.
For information on EtherCAT, refer to the *NJ/NX-series CPU Unit Built-in EtherCAT Port User's Manual (Cat. No. W505)*.

● CJ-series Unit Configuration

CPU Rack

The CPU Rack consists of the following items.

- NJ-series CPU Unit
- NJ-series Power Supply Unit
- CJ-series Configuration Units*1
  CJ-series Basic I/O Units, Special I/O Units, and CPU Bus Units
- I/O Control Unit
  An I/O Control Unit is required to connect an Expansion Rack.
- End Cover

*1. Some CJ-series Configuration Units cannot be used with an NJ-series CPU Unit.
Refer to *CJ-series Configuration Units* on page 2-12 for information on the models you can use with an NJ-series CPU Unit.

Expansion Racks

You can connect an Expansion Rack to an NJ-series CPU Rack or to another Expansion Rack.
A CPU Unit cannot be mounted to an Expansion Rack. The rest of the configuration is the same as for an NJ-series CPU Rack.

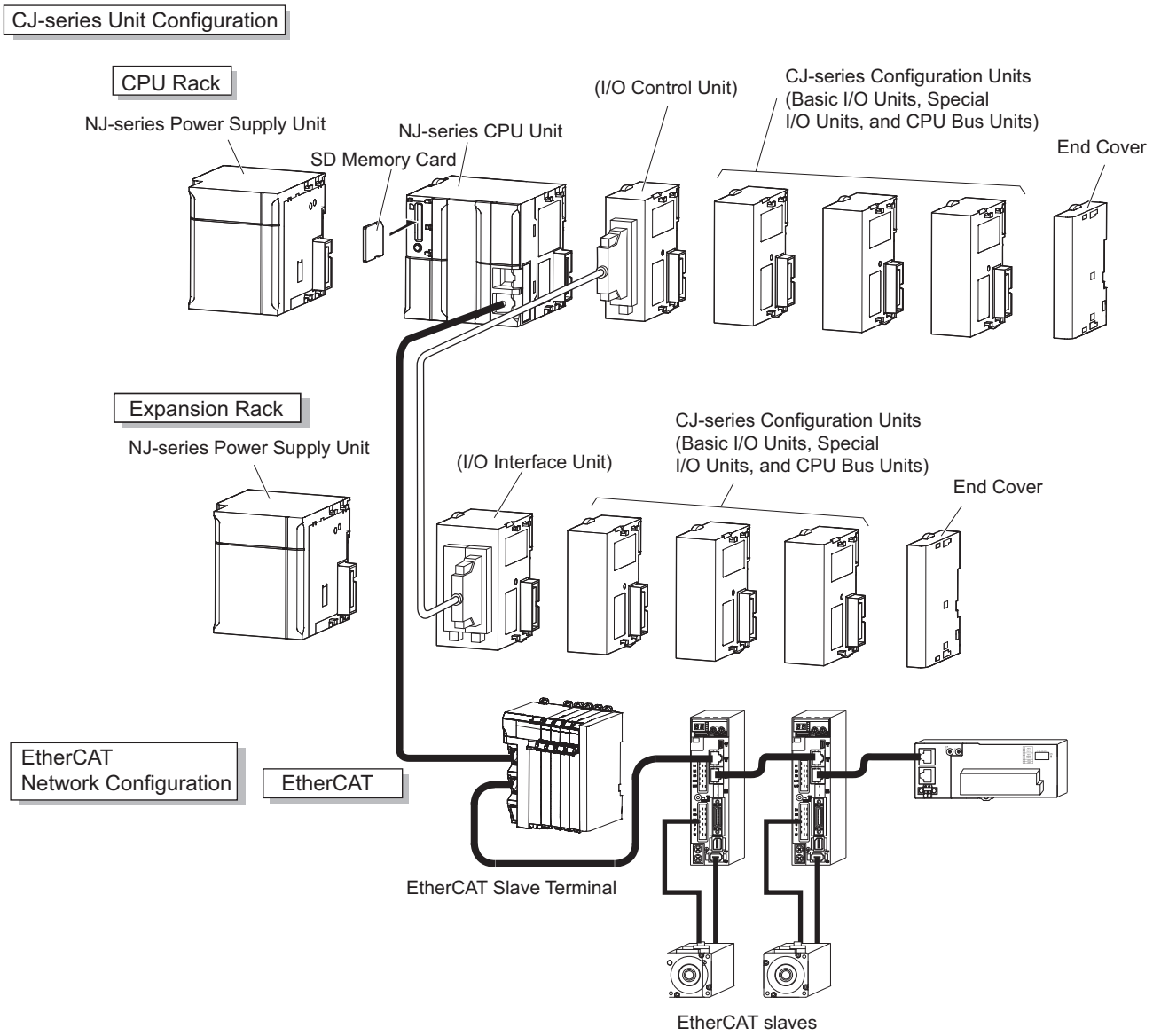
CJ-series Unit Configuration
CPU Rack
NJ-series Power Supply Unit
SD Memory Card
NJ-series CPU Unit
(I/O Control Unit)
CJ-series Configuration Units
(Basic I/O Units, Special
I/O Units, and CPU Bus Units)
End Cover
Expansion Rack
NJ-series Power Supply Unit
(I/O Interface Unit)
CJ-series Configuration Units
(Basic I/O Units, Special
I/O Units, and CPU Bus Units)
End Cover
EtherCAT
Network Configuration
EtherCAT
EtherCAT Slave Terminal
EtherCAT slaves

2-1-1 EtherCAT Network Configuration

The EtherCAT network configuration consists of an NJ-series CPU Unit, an NJ-series Power Supply Unit, a CJ-series End Cover, and the EtherCAT slaves.
You use the built-in EtherCAT master port on the NJ-series CPU Unit to connect EtherCAT slaves.
For information on the system configuration of an EtherCAT network, refer to the *NJ/NX-series CPU Unit Built-in EtherCAT Port User's Manual (Cat. No. W505)*.

EtherCAT Network Configuration

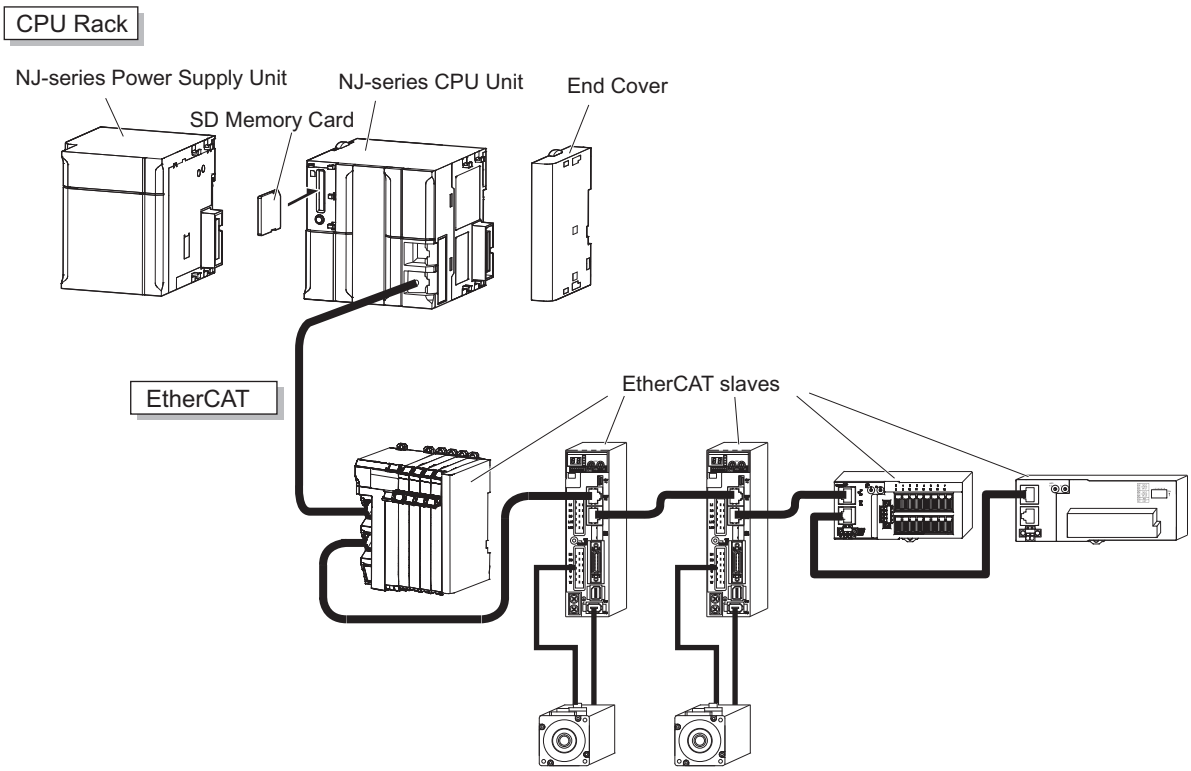

2-1-2 CJ-series Unit Configuration

The CJ-series Unit configuration consists of the CJ-series Units that are connected. It includes the CJ-series Units on the CPU Rack and Expansion Racks.

CPU Rack

The CPU Rack consists of an NJ-series CPU Unit, an NJ-series Power Supply Unit, CJ-series Configuration Units, and a CJ-series End Cover.
Up to 10 CJ-series Configuration Units can be connected.

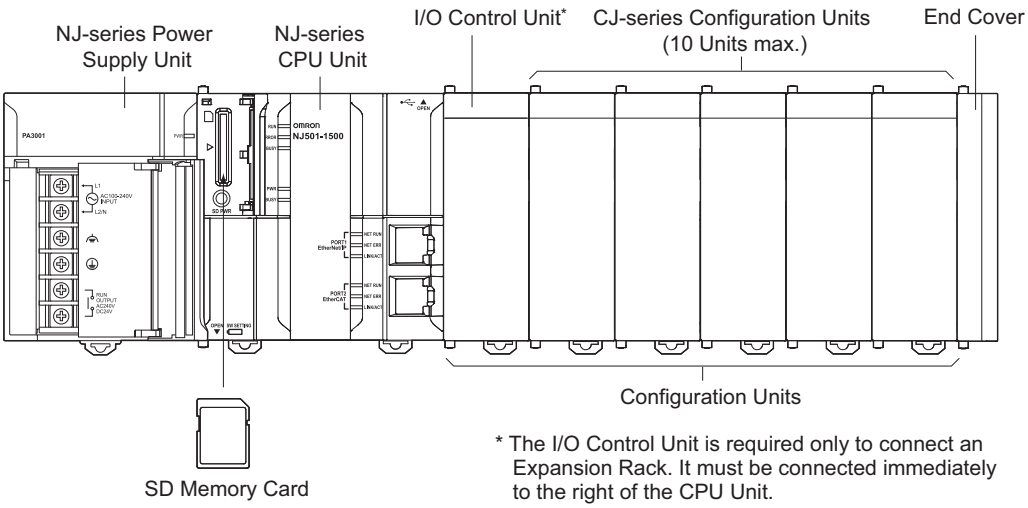

Even though the NJ-series Controllers do not have Backplanes, the term “slot” is still used to refer to the location of Units. Slot numbers are assigned in order to Units from left to right on the CPU Rack (slot 0, slot 1, slot 2, etc.).

Name	Configuration	Remarks
NJ-series Units	NJ-series CPU Units (One End Cover is provided with each Unit.)	One required for every CPU Rack.
	NJ-series Power Supply Unit	
	SD Memory Card	Install as required.
CJ-series Units	I/O Control Unit	Required to connect an Expansion Rack. Must be connected immediately to the right of the CPU Unit.
	End Cover	Must be connected to the right end of the CPU Rack. One End Cover is provided with the CPU Unit. (A Controller error in the major fault level will occur if the End Cover is not connected to the right end.)
	CJ-series Basic I/O Units	A total of up to 10 Units can be connected to the CPU Rack and to each of the Expansion Racks. (A Controller error in the major fault level will occur if 11 or more Units are connected.)
	CJ-series Special I/O Units	
	CJ-series CPU Bus Units	

Units

NJ-series CPU Units

Model	I/O capacity/Maximum number of Configuration Units (Maximum number of Expansion Racks)	Program capacity	Memory capacity for variables	Number of motion axes	Database connection service	GEM Services	Robot control for OMRON robots	Robot control by NJ Robotics function	Numerical control	Current consumption		Weight
										5 VDC	24 VDC	
NJ501-1500	2,560 points/40 Units (3 Expansion Racks)	20 MB	2 MB: Retained during power interruptions. 4 MB: Not retained during power interruptions.	64	Not supported.	Not supported.	Not supported.	Not supported.	Not supported.	1.90 A	---	550 g
NJ501-1400				32								
NJ501-1300				16								
NJ501-R500				64			Supported.	Supported.				
NJ501-R400				32								
NJ501-R300				16								
NJ501-4500				64			Not supported.					
NJ501-4400				32								
NJ501-4300				16								
NJ501-4310												
NJ501-1520				64	Supported.			Not supported.				
NJ501-1420				32								
NJ501-1320				16								
NJ501-4320								Supported.				
NJ501-1340					Not supported.	Supported.		Not supported.				
NJ501-5300						Not supported.			Supported.			

Model	I/O capacity/Maximum number of Configuration Units (Maximum number of Expansion Racks)	Program capacity	Memory capacity for variables	Number of motion axes	Database connection service	GEM Services	Robot control for OMRON robots	Robot control by NJ Robotics function	Numerical control	Current consumption		Weight
										5 VDC	24 VDC	
NJ301-1200		5 MB	0.5 MB: Retained during power interruptions. 2 MB: Not retained during power interruptions.	8					Not supported.			
NJ301-1100				4								
NJ101-1000		3 MB		2								
NJ101-9000				0								
NJ101-1020				2	Supported.							
NJ101-9020				0								

NJ-series Power Supply Units

Model	Power supply voltage	Output current		Output capacity	RUN output	CPU Rack	Expansion Racks	Weight
		5 VDC	24 VDC					
NJ-PA3001	100 to 240 VAC	6.0 A	1.0 A	30 W	Yes	Yes	Yes	470 g max.
NJ-PD3001	24 VDC	6.0 A	1.0 A	30 W	Yes	Yes	Yes	490 g max.

Note A CJ-series Power Supply Unit cannot be used to supply power to an NJ-system CPU Rack or Expansion Rack.
If you connect a CJ-series Power Supply Unit to a CPU Rack, an *Incorrect Power Supply Unit Connected* error will occur, and the CPU Unit will not operate. The RUN indicator will flash at a 3-s interval and the ERROR indicator will light.
If you connect the Power Supply Unit to an Expansion Rack, operation is performed without error detection. Normal operation, however, may be unstable due to insufficient supplied power. Also, an *Internal NJ-series Bus Check Error* (i.e., a Controller error in the major fault level) may occur when the power is interrupted.

Note The Power Supply Unit may continue to supply power to the rest of the Controller for a few seconds after the power supply turns OFF and the PWR indicator is lit during this time. If the NJ-series NJ-PD3001 Power Supply Unit is used, confirm that the PWR indicator is not lit when the power supply is tuned ON again after the power supply turns OFF.

Precautions for Safe Use

- Do not use the Power Supply Units in the system beyond the rated supply capacity ranges. Doing so may result in operation stopping, incorrect operation, or failure to correctly back up required data at power interruptions.
- Use only NJ-series Power Supply Units on NJ-series CPU Racks and Expansion Racks. Operation is not possible if you use a CJ-series Power Supply Unit with an NJ-series CPU Unit or an NJ-series Power Supply Unit with a CJ-series CPU Unit.

SD Memory Card

Refer to *Specifications of Supported SD Memory Cards, Folders, and Files* in the *NJ/NX-series CPU Unit Software User's Manual (Cat. No. W501)* for details.

I/O Control Unit

Model	Specifications	Current consumption		Weight
		5 VDC	24 VDC	
CJ1W-IC101	An I/O Control Unit is required to connect an NJ-series Expansion Rack to an NJ-series CPU Rack. The I/O Control Unit must be connected immediately to the right of the CPU Unit. Connect to the I/O Interface Unit (CJ1W-II101) on the Expansion Rack with a CS/CJ-series I/O Connecting Cable.	0.02 A	---	70 g max.

End Cover

Model	Specifications	Current consumption	Weight
CJ1W-TER01	The End Cover must be connected to the right end of the NJ-series CPU Rack. (A Controller error in the major fault level will occur if the End Cover is not connected to the right end of the Rack.) One End Cover is provided with the CPU Unit and with an I/O Interface Unit.	Included with the CPU Unit or Expansion Unit.	

Others

Name	Model	Specifications
DIN Track	PFP-50N	Track length: 50 cm, height: 7.3 mm
	PFP-100N	Track length: 1 m, height: 7.3 mm
	PFP-100N2	Track length: 1 m, height: 16 mm
	PFP-M	Stopper to prevent Units from moving on the track. Two each are provided with the CPU Unit and with an I/O Interface Unit.
Connecting cable for peripheral USB port (to connect the Sysmac Studio)	Commercially available USB cable	USB 2.0 certified cable (A connector - B connector), 5.0 m max.
Battery Set	CJ1W-BAT01	For CJ2 CPU Unit
Sysmac Studio Standard Edition	SYSMAC-SE□□□	The Sysmac Studio is a Support Software package that provides an integrated development environment to design, program, debug, and maintain SYSMAC NJ-series Controllers. The following Support Software is included. • Sysmac Studio • Network Configurator • CX-Integrator • CX-Protocol • CX-Designer

Recommended Communications Cables for EtherCAT and EtherNet/IP

EtherCAT communications are performed in accordance with the 100BASE-TX standard. Refer to the *NJ/NX-series CPU Unit Built-in EtherCAT Port User's Manual (Cat. No. W505)* for recommended cables.

EtherNet/IP communications are performed in accordance with the 100BASE-TX or 10BASE-T standard. Refer to the *NJ/NX-series CPU Unit Built-in EtherNet/IP Port User's Manual (Cat. No. W506)* for recommended cables.

Expansion Racks

CJ-series Expansion Racks can be connected to the CPU Rack to expand the number of Units in the System beyond the CPU Rack.
Up to 10 I/O Units can be mounted to each Expansion Rack and a total of 3 Expansion Racks can be connected.
Mount an I/O Control Unit immediately to the right of the CPU Unit, and mount the I/O Interface Unit immediately to the right of the Power Supply Unit on the Expansion Rack. Mounting them in other locations may cause malfunctions.

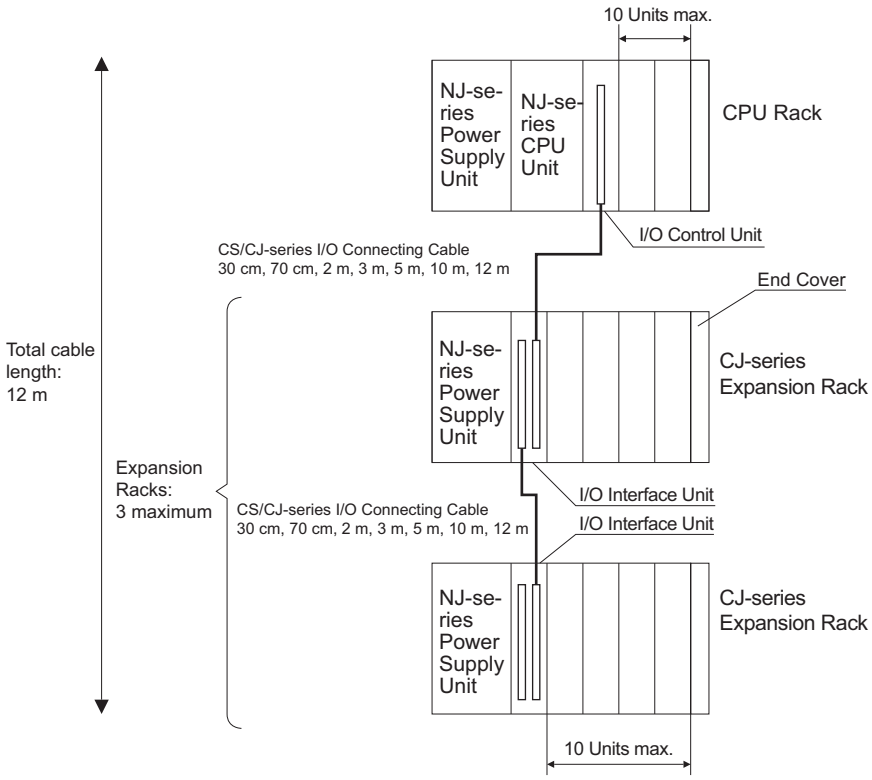

CS/CJ-series I/O Connecting Cables

Cable	Length
CS1W-CN313	0.3 m
CS1W-CN713	0.7 m
CS1W-CN223	2 m
CS1W-CN323	3 m
CS1W-CN523	5 m
CS1W-CN133	10 m
CS1W-CN133-B2	12 m

Use an NJ-series Power Supply Unit as the power supply for an Expansion Rack in an NJ-series System.
A CJ-series Power Supply Unit cannot be used to supply power on an NJ-system Expansion Rack.

● Maximum Number of Expansion Racks

Expansion pattern	Maximum number of Racks	Remarks
NJ-series CPU Rack plus CJ-series Expansion Racks	3 Racks	The total length of I/O Connecting Cable between the CPU Rack and an Expansion Rack, and between all Expansion Racks, must be no more than 12 m.

● Units

Units for CJ-series Expansion Racks

Rack	Configuration	Remarks
NJ-series Expansion Racks	NJ-series Power Supply Unit	One required for each Expansion Rack.*1
	I/O Interface Unit (one End Cover included.)	
	CJ-series Basic I/O Units	A total of up to 10 Units can be connected to the CPU Rack and to each of the Expansion Racks. (A Controller error in the major fault level will occur if 11 or more Units are connected.)
	CJ-series Special I/O Units	
	CJ-series CPU Bus Units	
	End Cover	Must be connected to the right end of the Expansion Rack. (One End Cover is provided with the I/O Interface Unit. A Controller error in the major fault level will occur if the End Cover is not connected to the right end.)
	CS/CJ-series I/O Connecting Cable	Required to connect the I/O Interface Unit to the I/O Control Unit or previous I/O Interface Unit.

*1. A CJ-series I/O Control Unit is required on the NJ-series CPU Rack.

NJ-series Power Supply Units

Model	Power supply voltage	Output current		Output capacity	RUN output	CPU Rack	Expansion Racks	Weight
		5 VDC	24 VDC					
NJ-PA3001	100 to 240 VAC	6.0 A	1.0 A	30 W	Yes	Yes	Yes	470 g max.
NJ-PD3001	24 VDC	6.0 A	1.0 A	30 W	Yes	Yes	Yes	490 g max.

Note Use an NJ-series Power Supply Unit as the power supply for an NJ-series Expansion Rack. A CJ-series Power Supply Unit cannot be used for an NJ-series Expansion Rack.

I/O Interface Unit

Model	Specifications	Current consumption		Weight
		5 VDC	24 VDC	
CJ1W-II101	One Interface Unit is required for each CJ-series Expansion Rack. One End Cover is provided with each Unit.	0.13 A	---	130 g max.*1

*1. Includes the weight of the End Cover.

End Cover

Model	Specifications	Current consumption		Weight
		5 VDC	24 VDC	
CJ1W-TER01	The End Cover must be connected to the right end of the CJ-series Expansion Rack. An *End Cover Missing* error (a Controller error in the major fault level) will occur if the End Cover is not connected to the right end of the Rack. One End Cover is provided with the CPU Unit and with an I/O Interface Unit.	Included with the CPU Unit or Expansion Unit.		

CS/CJ-series I/O Connecting Cables

Model	Specifications	Cable length
CS1W-CN313	An I/O Connecting Cable connects an I/O Control Unit (CJ1W-IC101) to an I/O Interface Unit (CJ1W-II101), or connects an I/O Interface Unit to another I/O Interface Unit.	0.3 m
CS1W-CN713		0.7 m
CS1W-CN223		2 m
CS1W-CN323		3 m
CS1W-CN523		5 m
CS1W-CN133		10 m
CS1W-CN133-B2		12 m

CJ-series Configuration Units

Maximum Number of Units

A maximum of 10 Units can be connected to the CPU Rack for an NJ-series CPU Unit or to an Expansion Rack.

There are no restrictions in the number of each model of Unit based on location.

Note If you connect more than the maximum number of Units to a CPU Rack or Expansion Rack, an *Incorrect Unit/Expansion Rack Connection* error (a major fault level Controller error) will occur, and the CPU Unit will not operate.

Models of Configuration Units

The Configuration Units with which the NJ-series CPU Unit can exchange data are classified into three groups. The number of Units that can be mounted depends on the type of Unit.

Units	Description	Unit identification method	Number of mountable Units
Basic I/O Units	Basic I/O Units are used for discrete inputs and outputs.	Identified by the CPU Unit according to mounting position.	Up to 40 Basic I/O Units can be mounted.
Special I/O Units	Special I/O Units are more advanced than Basic I/O Units. They support functions other than discrete inputs and outputs. Examples: Analog I/O Units and High-speed Counter Units Special I/O Units have a smaller area for exchanging data with the CPU Unit than CPU Bus Units (including Network Communications Units).	Identified by the CPU Unit using unit numbers 0 to 95 set with the rotary switches on the front panel of the Unit.	Up to 40 Special I/O Units can be mounted. (Depending on the model, 1 to 4 unit numbers are used for one Unit.)
CPU Bus Units	CPU Bus Units are advanced Units that exchange data with the CPU Unit via the CPU bus. Examples: Network Communications Units and Serial Communications Units CPU Bus Units have a larger area for exchanging data with the CPU Unit than Special I/O Units.	Identified by the CPU Unit using unit number 0 to F set with the rotary switch on the front panel of the Unit.	Up to 16 CPU Bus Units can be mounted.

● CJ-series Configuration Units

CJ-series Basic I/O Units

Input Units

Name	Specifications	Model	Number of bits allocated	Response time*1		Current consumption(A)		Weight
				ON	OFF	5 VDC	24 VDC	
DC Input Units	Terminal block 12 to 24 VDC, 8 inputs	CJ1W-ID201	16	20 μs max.	400 μs max.	0.08	---	110 g max.
	Terminal block 24 VDC, 16 inputs	CJ1W-ID211	16	20 μs max.	400 μs max.	0.08	---	110 g max.
		CJ1W-ID212	16	15 μs max.	90 μs max.	0.13	---	110 g max.
	Fujitsu / OTAX connector 24 VDC, 32 inputs	CJ1W-ID231*2	32	20 μs max.	400 μs max.	0.09	---	70 g max.
	MIL connector 24 VDC, 32 inputs	CJ1W-ID232*2	32	20 μs max.	400 μs max.	0.09	---	70 g max.
		CJ1W-ID233*2	32	15 μs max.	90 μs max.	0.20	---	70 g max.
	Fujitsu / OTAX connector 24 VDC, 64 inputs	CJ1W-ID261*2	64	120 μs max.	400 μs max.	0.09	---	110 g max.
	MIL connector 24 VDC, 64 inputs	CJ1W-ID262*2	64	120 μs max.	400 μs max.	0.09	---	110 g max.
AC Input Units	Terminal block 200 to 240 VAC, 8 inputs	CJ1W-IA201	16	10 ms max.	40 ms max.	0.08	---	130 g max.
	Terminal block 100 to 120 VAC, 16 inputs	CJ1W-IA111	16	10 ms max.	40 ms max.	0.09	---	130 g max.
Interrupt Input Unit	Terminal block 24 VDC, 16 inputs	CJ1W-INT01*3*4	16	0.05 ms max.	0.5 ms max.	0.08	---	110 g max.
Quick-response Input Unit	Terminal block 24 VDC, 16 inputs	CJ1W-IDP01	16	0.05 ms max.	0.5 ms max.	0.08	---	110 g max.
B7A Interface Units	64 inputs	CJ1W-B7A14	64	---	---	0.07	---	80 g max.

*1. Input response time when no filter (0 ms) is set. No filter (0 ms) is always set in the CJ1W-INT01/IDP01.

*2. The cable-side connector is not provided with Units equipped with cables. Purchase the connector separately (Refer to *4-4-4 Wiring CJ-series Basic I/O Units with Connectors* on page 4-35.), or use an OMRON Connector-Terminal Block Conversion Unit or I/O Relay Terminal (Refer to *4-4-5 Connecting to Connector-Terminal Block Conversion Units or I/O Relay Terminals* on page 4-40.).

*3. An Interrupt Input Unit can be connected only in a CPU Rack.
These Units must be mounted to slots 0 to 4 on the CPU Rack. An *Incorrect Unit/Expansion Rack Connection error* (major fault level Controller error) will occur if an Interrupt Input Unit is connected in other slots on the CPU Rack or to any slots on an Expansion Rack. Up to two Interrupt Input Units can be connected.

*4. Interrupt Input Units can be used as normal Basic I/O Units. They cannot be used to start I/O interrupt tasks.

Output Units

Name		Specifications	Model	Number of bits allocated	Current consumption (A)		Weight
					5 VDC	24 VDC	
Relay Output Units		Terminal block, 250 VAC/24 VDC, 2 A; 8 points, independent contacts	CJ1W-OC201	16	0.09	0.048 (0.006 × Number of ON outputs)	140 g max.
		Terminal block, 250 VAC/24 VDC, 2 A; 16 points	CJ1W-OC211	16	0.11	0.096 (0.006 × Number of ON outputs)	170 g max.
Triac Output Unit		Terminal block, 250 VAC, 0.6 A; 8 points	CJ1W-OA201	16	0.22	---	150 g max.
Transistor Output Units	Sinking outputs	Terminal block, 12 to 24 VDC, 2 A; 8 outputs	CJ1W-OD201	16	0.09	---	110 g max.
		Terminal block, 12 to 24 VDC, 0.5 A; 8 outputs	CJ1W-OD203	16	0.10	---	110 g max.
		Terminal block, 12 to 24 VDC, 0.5 A; 16 outputs	CJ1W-OD211*1	16	0.10	---	110 g max.
		Terminal block, 24 VDC, 0.5 A; 16 outputs	CJ1W-OD213*1	16	0.15	---	110 g max.
		Fujitsu / OTAX connector, 12 to 24 VDC, 0.5 A; 32 outputs	CJ1W-OD231*2	32	0.14	---	70 g max.
		MIL connector, 12 to 24 VDC, 0.5 A; 32 outputs	CJ1W-OD233*1*2	32	0.14	---	70 g max.
		MIL connector, 24 VDC, 0.5 A; 32 outputs	CJ1W-OD234*1*2	32	0.22	---	70 g max.
		Fujitsu / OTAX connector, 12 to 24 VDC, 0.3 A; 64 outputs	CJ1W-OD261*2	64	0.17	---	110 g max.
		MIL connector, 12 to 24 VDC, 0.3 A; 64 outputs	CJ1W-OD263*2	64	0.17	---	110 g max.

Name		Specifications	Model	Number of bits allocated	Current consumption (A)		Weight
					5 VDC	24 VDC	
	Sourcing outputs	Terminal block, 24 VDC, 2 A; 8 outputs, load short-circuit protection and disconnected line detection	CJ1W-OD202	16	0.11	---	120 g max.
		Terminal block, 24 VDC, 0.5 A; 8 outputs, load short-circuit protection	CJ1W-OD204	16	0.10	---	120 g max.
		Terminal block, 24 VDC, 0.5 A; 16 outputs, load short-circuit protection	CJ1W-OD212	16	0.10	---	120 g max.
		MIL connector, 24 VDC, 0.5 A; 32 outputs, load short-circuit protection	CJ1W-OD232*2	32	0.15	---	80 g max.
		MIL connector, 12 to 24 VDC, 0.3 A; 64 outputs	CJ1W-OD262*2	64	0.17	---	110 g max.
B7A Interface Units		64 outputs	CJ1W-B7A04	64	0.07	---	80 g max.

*1. The ON/OFF response time for the CJ1W-OD213/CJ1W-OD234 is shorter than for the CJ1W-OD211/CJ1W-OD233, as shown below.
- ON response time: 0.1 ms improved to 0.015 ms
- OFF response time: 0.8 ms improved to 0.08 ms

*2. The cable-side connector is not provided with Units equipped with cables. Purchase the connector separately (Refer to *4-4-4 Wiring CJ-series Basic I/O Units with Connectors* on page 4-35.), or use an OMRON Connector-Terminal Block Conversion Unit or I/O Relay Terminal (Refer to *4-4-5 Connecting to Connector-Terminal Block Conversion Units or I/O Relay Terminals* on page 4-40.).

Mixed I/O Units

Name		Specifications	Model	Number of bits allocated	Current consumption (A)		Weight
					5 VDC	24 VDC	
24-VDC Input/ Transistor Output Units	Sinking	Fujitsu / OTAX connector Inputs: 24 VDC, 16 inputs Outputs: 12 to 24 VDC, 0.5 A; 16 outputs	CJ1W-MD231*1	32	0.13	---	90 g max.
		Fujitsu / OTAX connector Inputs: 24 VDC, 32 inputs Outputs: 12 to 24 VDC, 0.3 A; 32 outputs	CJ1W-MD261*1	64	0.14	---	110 g max.
		MIL connector Inputs: 24 VDC, 16 inputs Outputs: 12 to 24 VDC, 0.5 A; 16 outputs	CJ1W-MD233*1	32	0.13	---	90 g max.
		MIL connector Inputs: 24 VDC, 32 inputs Outputs: 12 to 24 VDC, 0.3 A; 32 outputs	CJ1W-MD263*1	64	0.14	---	110 g max.
	Sourcing	MIL connector Inputs: 24 VDC, 16 inputs Outputs: 24 VDC, 0.5 A; 16 outputs Load-short circuit protection	CJ1W-MD232*1	32	0.13	---	80 g max.
TTL I/O Units		MIL connector Inputs: TTL (5 VDC), 32 inputs Outputs: TTL (5 VDC, 35 mA), 32 outputs	CJ1W-MD563*1	64	0.19	---	110 g max.
B7A Interface Units		32 inputs, 32 outputs	CJ1W-B7A22	64	0.07	---	80 g max.

*1. The cable-side connector is not provided with Units equipped with cables. Purchase the connector separately (Refer to *4-4-4 Wiring CJ-series Basic I/O Units with Connectors* on page 4-35.), or use an OMRON Connector-Terminal Block Conversion Unit or I/O Relay Terminal (Refer to *4-4-5 Connecting to Connector-Terminal Block Conversion Units or I/O Relay Terminals* on page 4-40.).

CJ-series Special I/O Units

Type	Name	Specifications	Model	Unit No.	Number of words allocated	Words allocated in DM Area	Number of mountable Units	Current consumption (A)		Weight
								5 VDC	24 VDC	
Special I/O Units	Analog Input Unit with Universal Inputs	4 inputs, fully universal	CJ1W-AD04U	0 to 95	10 words	100 words	40 Units	0.32	---	150 g max.

Type	Name	Specifications	Model	Unit No.	Number of words allocated	Words allocated in DM Area	Number of mountable Units	Current consumption (A)		Weight
								5 VDC	24 VDC	
	Analog Input Units	8 inputs (1 to 5 V, 4 to 20 mA, etc.)	CJ1W-AD081-V1	0 to 95	10 words	100 words	40 Units	0.42	---	140 g max.
		4 inputs (1 to 5 V, 4 to 20 mA, etc.)	CJ1W-AD041-V1	0 to 95	10 words	100 words	40 Units	0.42	---	140 g max.
		4 inputs (1 to 5 V, 4 to 20 mA, etc.)	CJ1W-AD042	0 to 95	10 words	100 words	40 Units	0.52	---	150 g max.
	Analog Output Units	4 outputs (1 to 5 V, 4 to 20 mA, etc.)	CJ1W-DA041	0 to 95	10 words	100 words	40 Units	0.12	---	150 g max.
		2 outputs (1 to 5 V, 4 to 20 mA, etc.)	CJ1W-DA021	0 to 95	10 words	100 words	40 Units	0.12	---	150 g max.
		8 outputs (1 to 5 V, 0 to 10 V, etc.)	CJ1W-DA08V	0 to 95	10 words	100 words	40 Units	0.14	---	150 g max.
		8 outputs (4 to 20 mA)	CJ1W-DA08C	0 to 95	10 words	100 words	40 Units	0.14	---	150 g max.
		4 outputs (1 to 5 V, 0 to 10 V, etc.)	CJ1W-DA042V	0 to 95	10 words	100 words	40 Units	0.40	---	150 g max.
	Analog I/O Unit	4 inputs (1 to 5 V, 4 to 20 mA, etc.) 2 outputs (1 to 5 V, 4 to 20 mA, etc.)	CJ1W-MAD42	0 to 95	10 words	100 words	40 Units	0.58	---	150 g max.
	Analog Input Unit with Universal Inputs	4 inputs, fully universal Resolution: 1/256,000, 1/64,000, 1/16,000	CJ1W-PH41U	0 to 95	10 words	100 words	40 Units	0.30	---	150 g max.
	Analog Current Input Unit	DC voltage or DC current, 2 inputs	CJ1W-PDC15	0 to 95	10 words	100 words	40 Units	0.18	---	150 g max.

Type	Name	Specifications	Model	Unit No.	Number of words allocated	Words allocated in DM Area	Number of mountable Units	Current consumption (A)		Weight
								5 VDC	24 VDC	
	Temperature Control Units	2 control loops, thermocouple inputs, NPN outputs, heater burnout detection	CJ1W-TC003	0 to 94 (uses words for 2 unit numbers)	20 words	200 words	40 Units	0.25	---	150 g max.
		2 control loops, thermocouple inputs, PNP outputs, heater burnout detection	CJ1W-TC004	0 to 94 (uses words for 2 unit numbers)	20 words	200 words	40 Units	0.25	---	150 g max.
		2 control loops, temperature-resistance thermometer inputs, NPN outputs, heater burnout detection	CJ1W-TC103	0 to 94 (uses words for 2 unit numbers)	20 words	200 words	40 Units	0.25	---	150 g max.
		2 control loops, temperature-resistance thermometer inputs, PNP outputs, heater burnout detection	CJ1W-TC104	0 to 94 (uses words for 2 unit numbers)	20 words	200 words	40 Units	0.25	---	150 g max.
	ID Sensor Units	V680-series single-head type	CJ1W-V680C11	0 to 95	10 words	100 words	40 Units	0.26	0.130	120 g max.
		V680-series two-head type	CJ1W-V680C12	0 to 94 (uses words for 2 unit numbers)	20 words	200 words	40 Units	0.32	0.260	130 g max.
	High-speed Counter Unit	Number of counter channels: 2, Maximum input frequency: 500 kHz, line driver compatible	CJ1W-CT021	0 to 92 (uses words for 4 unit numbers)	40 words	400 words	24 Units	0.28	---	100 g max.

Type	Name	Specifications	Model	Unit No.	Number of words allocated	Words allocated in DM Area	Number of mountable Units	Current consumption (A)		Weight
								5 VDC	24 VDC	
Special I/O Units	CompoNet Master Units	CompoNet remote I/O	CJ1W-CRM21*1	0 to 94 (uses words for 2 unit numbers)	20 words	None	40 Units	0.40	---	130 g max.
		Communications mode 0: 128 inputs and 128 outputs for Word Slaves								
		Communications mode 1: 256 inputs and 256 outputs for Word Slaves		0 to 92 (uses words for 4 unit numbers)	40 words	None	24 Units	0.40	---	
		Communications mode 2: 512 inputs and 512 outputs for Word Slaves		0 to 88 (uses words for 8 unit numbers)	80 words	None	12 Units	0.40	---	
		Communications mode 3: 256 inputs and 256 outputs for Word Slaves, 128 inputs and 128 outputs for Bit Slave Units		0 to 88 (uses words for 8 unit numbers)	80 words	None	12 Units	0.40	---	
		Communications mode 8: 1,024 inputs and 1,024 outputs max. for Word Slaves, 256 inputs and 256 outputs max. for Bit Slave Units		0 to 95 (uses words for 1 unit number)	10 words*2	None*2	40 Units	0.40	---	

*1. A CPU Unit with unit version 1.01 or later and Sysmac Studio version 1.02 or higher are required. Refer to *A-7 Version Information* on page A-129 for information on version upgrades.

*2. In addition, up to 208 other words are allocated depending on the number of Slave Units to which words are allocated and their I/O capacity. Use the CX-Integrator to allocate words.

CJ-series CPU Bus Units

Type	Name	Specifications	Model	Unit No.	Number of words allocated	Number of mountable Units*1	Current consumption (A)		Weight
							5 VDC	24 VDC	
CPU Bus Units	Serial Communications Units	Two RS-232C ports High-speed models	CJ1W-SCU22	0 to F	25 words	16 Units	0.28*2	---	160 g max.
		Two RS-422A/485 ports High-speed models	CJ1W-SCU32				0.40		120 g max.
		One RS-232C port and one RS-422A/485 port High-speed models	CJ1W-SCU42				0.36*2		140 g max.
	DeviceNet Unit	DeviceNet remote I/O, 2,048 points; User-specified allocations are possible without the CX-Integrator.	CJ1W-DRM21	0 to F	25 words	16 Units	0.29	---	118 g max.*3
	EtherNet/IP Unit	Tag data links, CIP message communications, FTP server, etc.	CJ1W-EIP21*4	0 to F	25 words	4 Units*5	0.41	---	94 g max.
			CJ1W-EIP21S*6				0.65		91 g max.
	EtherCAT Slave Unit	EtherCAT communications, Baud rate 100 Mbps	CJ1W-ECT21	0 to F	25 words	16 Units	0.34	---	97 g max.

*1. Up to 16 CPU Bus Units can be mounted.
*2. Increases by 0.15 A/Unit when an NT-AL001 RS-232C/RS-422A Link Adapter is used.
Increases by 0.04 A/Unit when a CJ1W-CIF11 RS-422A Converter is used.
*3. Includes the weight of accessory connectors.
*4. Use an EtherNet/IP Unit with a unit version of 2.1 or later.
Also use a CPU Unit with unit version 1.01 or later and Sysmac Studio version 1.02 or higher.
Refer to *A-7 Version Information* on page A-129 for information on version upgrades.
*5. Up to 4 CJ1W-EIP21 and CJ1W-EIP21S can be mounted.
*6. The CJ1W-EIP21S can be mounted on the NJ-series CPU Unit in the following combinations.
- CJ1W-EIP21S: Lot. number: 241001□ or later
- NJ-series CPU Unit: Unit version 1.67 or later
- Sysmac Studio: Version 1.60 or higher

2-2 Connecting to the Sysmac Studio

Connect the NJ-series CPU Unit and the Sysmac Studio through USB or EtherNet/IP.
Refer to *3-7-2 Connection* on page 3-34 for information on how to make the connection between the NJ-series CPU Unit and the Sysmac Studio.

2-3 Network Configuration

You can make networks in the following layers with an NJ-series Controller.
For details on communications networks that you can connect to, refer to the *NJ/NX-series CPU Unit Software User's Manual (Cat. No. W501)*.

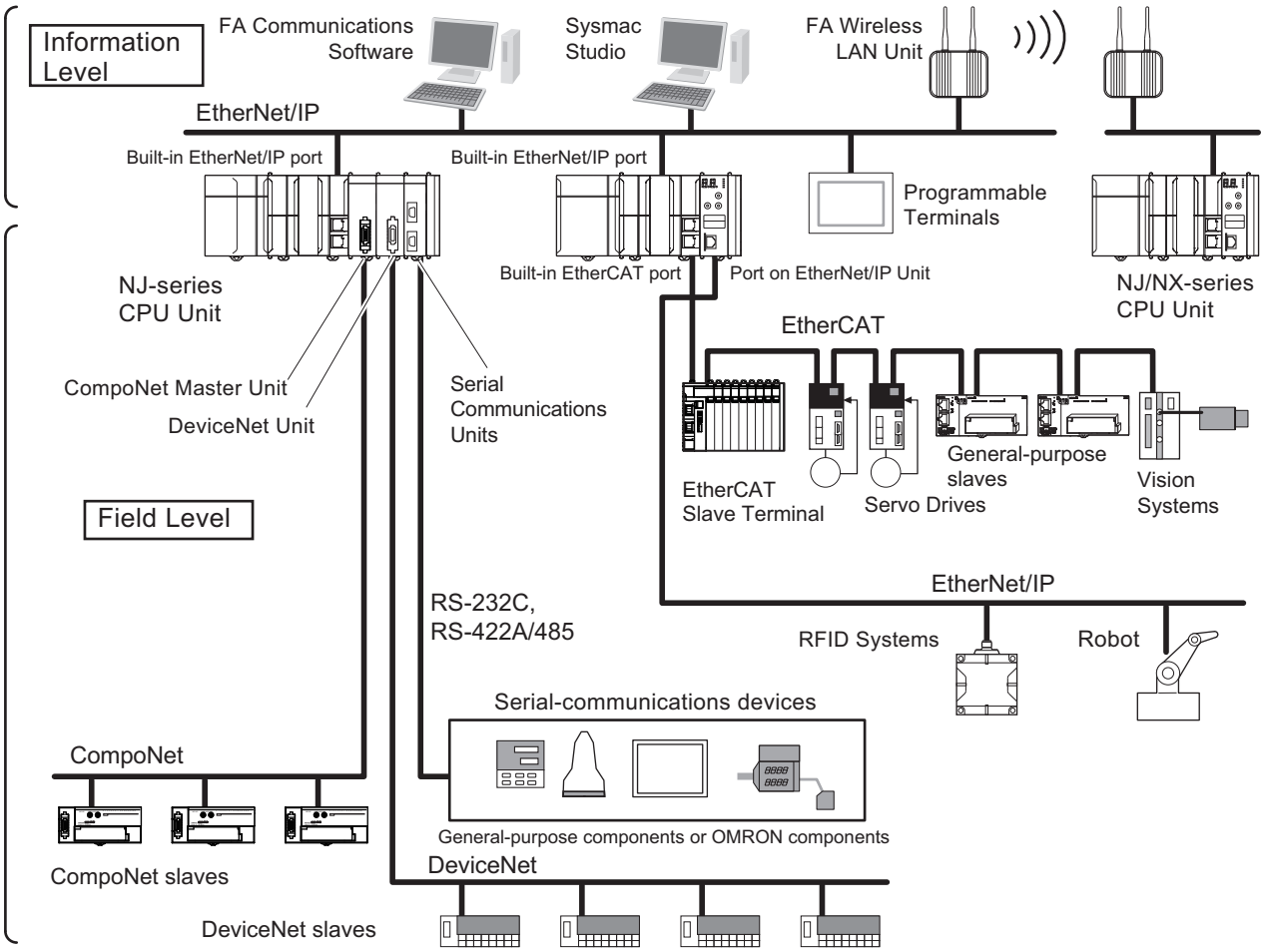

Connection		Connection method
Sysmac Studio		Use USB or the built-in EtherNet/IP port.
Between Controllers	NJ-series Controller or CJ-series PLC	Use the built-in EtherNet/IP port or a port on an EtherNet/IP Unit.*1
Devices	Servo Drives, general-purpose slaves and Vision Systems	Use the built-in EtherCAT port.
	Ethernet communications devices	Use the built-in EtherNet/IP port or a port on an EtherNet/IP Unit.*1
	Serial-communications devices	Mount a Serial Communications Unit and use RS-232C port or RS-422A/485 ports.
	DeviceNet slaves	Mount a DeviceNet Unit and use DeviceNet.
	CompoNet slaves	Mount a CompoNet Master Unit and use CompoNet.
Programmable Terminals		Use the built-in EtherNet/IP port or a port on an EtherNet/IP Unit.*1

Connection		Connection method
Servers	Connections to BOOTP server, DNS server, or NTP server	Use the built-in EtherNet/IP port or a port on an EtherNet/IP Unit.*1

*1. Use a CJ-series EtherNet/IP Unit with a unit version of 2.1 or later.
Also use CPU Units with unit version 1.01 or later and Sysmac Studio version 1.02 or higher.
Refer to *A-7 Version Information* on page A-129 for information on version upgrades.

3

Configuration Units

This section describes the configuration devices in the CJ-series Unit configuration.

3-1 CPU Units 3-2
3-1-1 Models and Specifications 3-2
3-1-2 Components and Functions 3-3

3-2 SD Memory Cards 3-11
3-2-1 Models and Specifications 3-11
3-2-2 Purpose 3-11
3-2-3 Installing and Removing 3-11

3-3 Power Supply Units 3-14
3-3-1 Models and Specifications 3-14
3-3-2 Components and Functions 3-16
3-3-3 Selecting a Power Supply Unit 3-17

3-4 CJ-series Basic I/O Units 3-22
3-4-1 Models and Specifications 3-22
3-4-2 Part Names and Functions 3-24

3-5 B7A Interface Ports 3-27
3-5-1 Overview 3-27
3-5-2 System Configuration 3-27
3-5-3 Models 3-27
3-5-4 B7A Communications Specifications 3-28
3-5-5 Common Specifications 3-29
3-5-6 B7A Interface Port I/O Types 3-29
3-5-7 Parts and Names 3-30
3-5-8 Transmission Error Processing 3-31

3-6 CJ-series I/O Control Units and I/O Interface Units 3-33
3-6-1 Models and Specifications 3-33
3-6-2 Component and Functions 3-33

3-7 Sysmac Studio 3-34
3-7-1 Model Numbers 3-34
3-7-2 Connection 3-34

3-1 CPU Units

3-1-1 Models and Specifications

Type of Unit	Model	I/O capacity/Maximum number of Configuration Units (Maximum number of Expansion Racks)	Program capacity	Memory capacity for variables	Number of motion axes	Database connection service	GEM Services	Robot control for OMRON robots	Robot control by NJ Robotics function	Numerical control
NJ501 CPU Units	NJ501-1500	2,560 points/40 Units (3 Expansion Racks)	20 MB	2 MB: Retained during power interruptions 4 MB: Not retained during power interruptions	64	Not supported.	Not supported.	Not supported.	Not supported.	Not supported.
	NJ501-1400				32					
	NJ501-1300				16					
	NJ501-R500				64			Supported.	Supported.	
	NJ501-R400				32					
	NJ501-R300				16					
	NJ501-4500				64			Not supported.		
	NJ501-4400				32					
	NJ501-4300				16					
	NJ501-4310									
	NJ501-1520				64	Supported.			Not supported.	
	NJ501-1420				32					
	NJ501-1320				16					
	NJ501-4320								Supported.	
	NJ501-1340					Not supported.	Supported.		Not supported.	
	NJ501-5300						Not supported.			Supported.
NJ301 CPU Units	NJ301-1200		5 MB	0.5 MB: Retained during power interruptions 2 MB: Not retained during power interruptions	8					Not supported.
	NJ301-1100				4					
NJ101 CPU Units	NJ101-1000		3 MB		2					
	NJ101-9000				0					
	NJ101-1020				2	Supported.				
	NJ101-9020				0					

3-1-2 Components and Functions

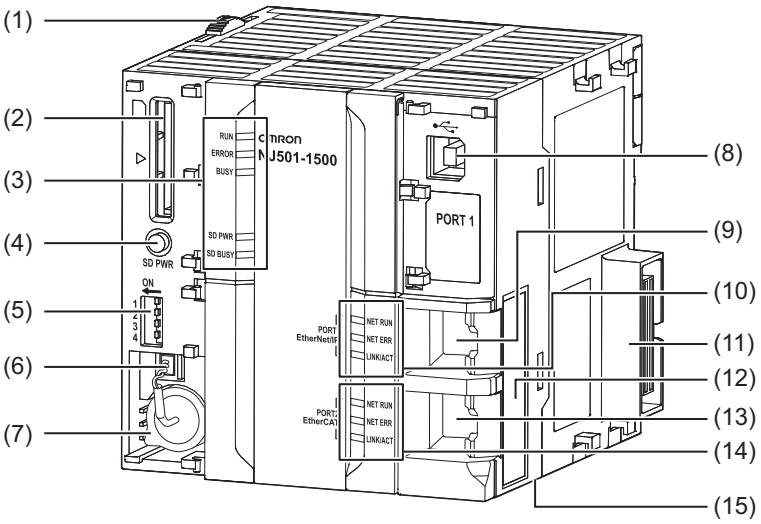

Number	Name	Function
1	Slider	Holds the Units together.
2	SD Memory Card connector	Connects the SD Memory Card to the CPU Unit.
3	CPU Unit operation indicators	Shows the operation status of the CPU Unit. Refer to *CPU Unit Operation Status Indicators* on page 3-6.
4	SD Memory Card power supply switch	Turns OFF the power supply so that you can remove the SD Memory Card. Refer to *3-2 SD Memory Cards* on page 3-11.
5	DIP switch	Used in Safe Mode or when backing up data. Normally, turn OFF all of the pins.
6	Battery connector	Connector to mount the backup battery.
7	Battery	Battery for backup.
8	Peripheral USB port	Connects to the Sysmac Studio via a USB cable.
9	Built-in EtherNet/IP port (port 1)	Connects the built-in EtherNet/IP with an Ethernet cable.
10	Built-in EtherNet/IP port operation indicators	Shows the operation status of the built-in EtherNet/IP. Refer to *Built-in EtherNet/IP Port (Port 1) Indicators* on page 3-8.
11	Unit connector	Connects to another Unit.
12	ID information indication	Shows the ID information of the CPU Unit.
13	Built-in EtherCAT port (port 2)	Connects the built-in EtherCAT with an Ethernet cable.
14	Built-in EtherCAT port operation indicators	Shows the operation status of the built-in EtherCAT. Refer to *Built-in EtherCAT Port (Port 2) Indicators* on page 3-9.
15	DIN Track mounting pins	Secures the Unit to a DIN Track.

DIP Switch

Set the DIP switch when backing up data or using Safe Mode, etc. The meanings of each function, DIP switch settings, and reference manuals are shown in the table below. If you do not want to use these functions, turn OFF all pins.
The figure below shows an example setting when the Safe Mode is used.

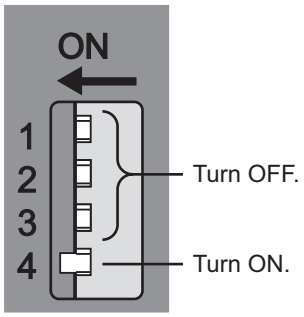

Function	Meaning	DIP switch				Reference manual
		4	3	2	1	
Backup	You can back up all of the data in the Controller to an SD Memory Card.	OFF	ON	OFF	OFF	*NJ/NX-series CPU Unit Software User's Manual (Cat. No. W501)*
Restore*1	You can transfer the various setting data stored in the SD Memory Card to the Controller.	ON	ON	OFF	OFF	
Automatic transfer from SD Memory Card*1	You can automatically transfer the various setting data stored in the SD Memory Card to the Controller when the power is turned ON.	OFF	OFF	ON	OFF	
Safe Mode*1	You can start the Unit in PROGRAM mode when the power is turned ON. Use the Safe Mode if you do not want to execute the user program immediately after the power is turned ON, or if it is difficult to connect the Sysmac Studio.	ON	OFF	OFF	OFF	*NJ/NX-series Troubleshooting Manual (Cat. No. W503)*

Function	Meaning	DIP switch				Reference manual
		4	3	2	1	
Enabling connections to the Sysmac Studio and NA that are not supporting secure communication*1	You can use this function to communicate with the Sysmac Studio with versions that are not supporting secure communication, or NA-series HMI.	OFF	OFF	ON	ON	*NJ/NX-series CPU Unit Software User's Manual (Cat. No. W501)*
Safe Mode, and enabling connections to the Sysmac Studio and NA that are not supporting secure communication*1	You can set both of the Safe Mode and enabling connections to the Sysmac Studio and NA that are not supporting secure communication.	ON	OFF	ON	ON	
Automatic transfer from SD Memory Card, and enabling connections to the Sysmac Studio and NA that are not supporting secure communication*1	You can set both of the automatic transfer from SD Memory Card and enabling connections to the Sysmac Studio and NA that are not supporting secure communication.	OFF	ON	ON	ON	

*1. This function operates when the power supply to the CPU Unit is turned ON after you change the DIP switch settings. If you want to use this function, turn ON power to the CPU Unit after you change the DIP switch settings.

CPU Unit Operation Status Indicators

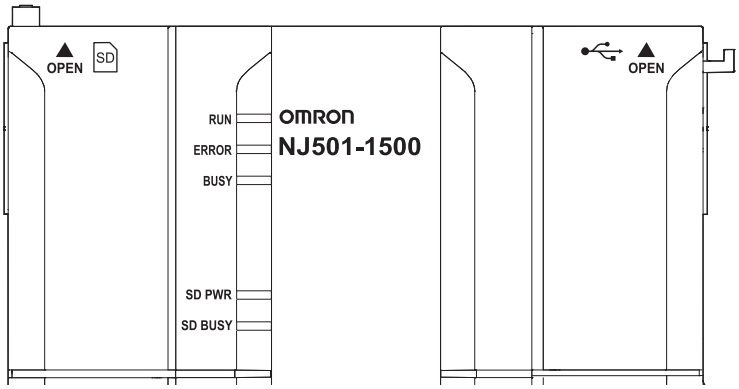

You can check the CPU Unit status with the indicators at the top of the front panel of the CPU Unit. The following table describes these indicators.

Indicator	Color	Status	Meaning
RUN	Green	Lit	The CPU Unit is in normal operation in RUN mode. (The user program is in execution.)
		Flashing (3-s intervals)	An *Incorrect Power Supply Unit Connected* error occurred. (A CJ-series Power Supply Unit is connected in the CPU Rack.) The CPU Unit will not operate and the ERROR indicator will light.
		Flashing (1-s intervals)	The CPU Unit is starting (entering RUN mode or PROGRAM mode at startup).
		Not lit	Operation is stopped in PROGRAM mode, when a CPU Unit reset is in progress, or when any of the following errors occurs. • *Controller error in the major fault level* • *CPU error (WDT error)*
ERROR	Red	Lit	Self-diagnosis found one of the following errors. • *Controller error in the major fault level* • *CPU error (WDT error)* The CPU Unit operation will stop, and all outputs will turn OFF.
		Flashing (1-s intervals)	Self-diagnosis found one of the following errors. • *Controller error in the partial fault level* (an error in which all control of a Function Module is disabled) • *Controller error in the minor fault level* (an error in which partial control of a Function Module is disabled) CPU Unit operation will continue for either of these errors. Operation will stop for the Function Module in which a *Controller error in the partial fault level* occurred. Operation will continue for the Function Module in which a *Controller error in the minor fault level* occurred.
		Not lit	The CPU Unit is in normal operation, a CPU reset is in progress, or monitored information occurred. (CPU Unit operation will continue.)
BUSY	Yellow	Flashing	Built-in non-volatile memory access in progress.
		Not lit	Other than the above.

Indicator	Color	Status	Meaning
SD PWR	Green	Lit	Power is being supplied to the SD Memory Card and the SD Memory Card can be used.
		Flashing	---
		Not lit	The power supply for the SD Memory Card is stopped, an SD Memory Card is not mounted, or the file format of the mounted SD Memory Card is not supported.
SD BUSY	Yellow	Flashing	SD Memory Card access in progress.
		Not lit	SD Memory Card access not in progress

Precautions for Safe Use

- Do not turn OFF the power supply to the Controller while the BUSY indicator flashes. While the BUSY indicator is lit, the user program and settings in the CPU Unit are being backed up in the built-in non-volatile memory. The data will not be backed up if the power supply is turned OFF. The next time that the Controller is started, a Controller error in the major fault level will occur and operation will stop.
- Do not turn OFF the power supply or remove the SD Memory Card while SD Memory Card access is in progress (i.e., while the SD BUSY indicator flashes). Data may become corrupted, and the Controller will not operate correctly if it uses corrupted data. To remove an SD Memory Card from the CPU Unit when power is supplied to the CPU Unit, press the SD Memory Card power supply switch and wait for the SD PWR indicator to turn OFF before you remove the SC Memory Card.

Built-in EtherNet/IP Port (Port 1) Indicators

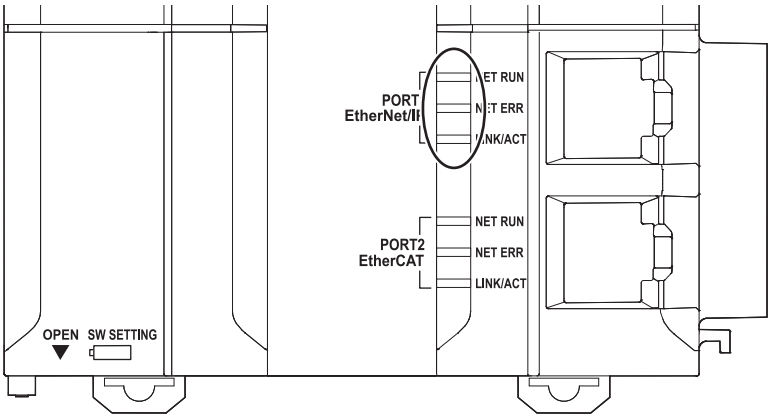

Indicator	Color	Status	Contents
NET RUN	---	Not lit	You cannot perform Ethernet communications. • The power supply is OFF or the CPU Unit was reset. • A MAC address error or communications Controller error occurred.
	Green	Flashing	Ethernet communications are in progress. • Tag data link connection establishment in progress. • IP address acquisition with BOOTP in progress.
		Lit	Normal startup status.
NET ERR	---	Not lit	There are no Ethernet communications errors. • The power supply is OFF or the CPU Unit was reset.
	Red	Flashing	An error for which the user can recover operation occurred. • An error occurred in TCP/IP communications or CIP communications. • FTP server setting error, NTP server setting error, etc. • Tag data link setting error, tag data link verification error, etc.
		Lit	An error for which the user cannot recover operation occurred. • A MAC address error or communications Controller error occurred.
LINK/ACT	---	Not lit	A link was not established. • The cable is not connected. • The power supply is OFF or the CPU Unit was reset.
	Yellow	Flashing	The link is established, and data communications are in progress.
		Lit	The link was established.

Built-in EtherCAT Port (Port 2) Indicators

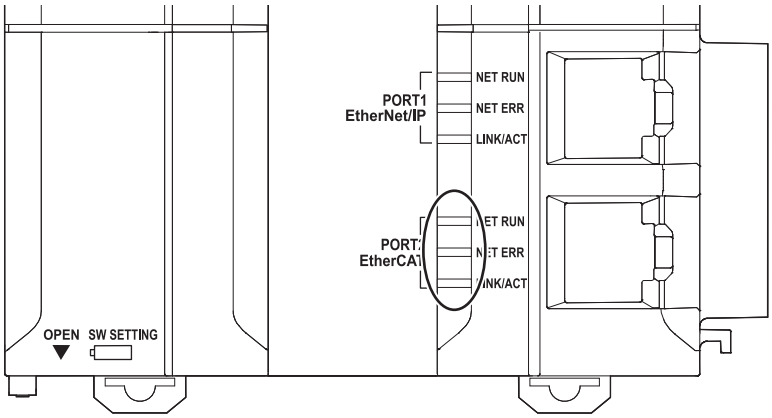

Indicator	Color	Status	Description
NET RUN	Green	Lit	EtherCAT communications are in progress. • Inputs and outputs for I/O data are in operation.
		Flashing	EtherCAT communications are being established. This indicator shows either of the following conditions. • Only message communications are in operation. • Only message communications and I/O data inputs are in operation.
		Not lit	EtherCAT communications are stopped. • The power supply is OFF or the CPU Unit was reset. • A MAC address error, communications Controller error, or other error occurred.
NET ERR	Red	Lit	A hardware error or unrecoverable error occurred, such as for exception processing.
		Flashing	A recoverable error occurred.
		Not lit	There are no errors.
LINK/ACT	Yellow	Lit	A link was established.
		Flashing	Data communications are in progress after establishing link. Flashes every time data is sent or received.
		Not lit	The link was not established.

Battery

The following Battery is built in as a standard feature.

Model	Appearance	Specifications
CJ1W-BAT01	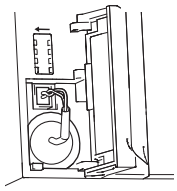	Effective life (i.e., maximum life expectancy): 5 years*1 The following values are retained during power interruptions. • Values of variables with a Retain attribute • Words for CJ-series Units in the Holding, DM, and EM Areas • Clock information • Some system-defined variables • Event logs

*1. The Battery installed at the time of purchase is only for monitoring purpose to test the battery backup function. The Battery is exhausted depending on the period from factory checking to actual operation, thus it may not satisfy specified battery lifetime.

ID Information Indication

You can check the followings in the ID information indications on the right side of the CPU Unit.

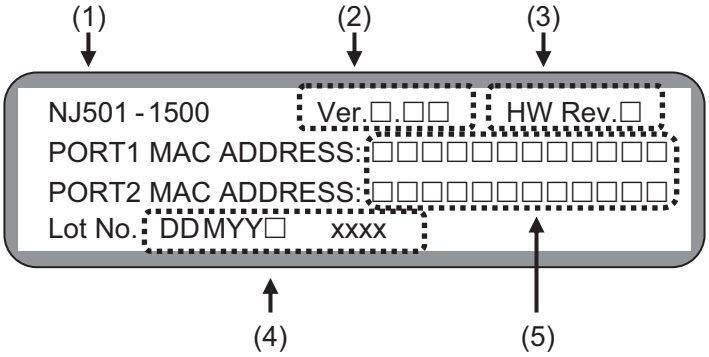

Number	Name	Function
1	Unit model	Shows the model of the CPU Unit.
2	Unit version	Shows the unit version of the CPU Unit.
3	Hardware revision	Shows the hardware revision of the CPU Unit.*1
4	Lot number and serial number	Shows the lot number and the serial number of the CPU Unit. DDMYY: Lot number, □: For use by OMRON, xxxx: Serial number M is 1 to 9 for January to September, X for October, Y for November, and Z for December.
5	MAC addresses	Shows the MAC addresses of the built-in ports on the CPU Unit.

*1. The hardware revision is not displayed for the Unit that the hardware revision is in blank.

3-2 SD Memory Cards

3-2-1 Models and Specifications

Refer to *Specifications of Supported SD Memory Cards, Folders, and Files* in the *NJ/NX-series CPU Unit Software User's Manual (Cat. No. W501)* for details.

3-2-2 Purpose

You can use the SD Memory Card for the following applications.

- Read and write files in the SD Memory Card with instructions.
- Read and write files in the SD Memory Card from an FTP client on EtherNet/IP.
- Back up, restore, and verify data in the Controller.
- Transfer data from the SD Memory Card to the Controller when the power is turned ON.

Version Information

A CPU Unit with unit version 1.03 or later and Sysmac Studio version 1.04 or higher are required to use the SD Memory Card backup functions and automatic transfer from SD Memory Cards.

3-2-3 Installing and Removing

Before Using an SD Memory Card

- Keep the following precautions because an SD Memory Card may become unusable.
  a) Do not turn OFF the power supply to the Controller while the SD BUSY indicator is lit (i.e., while SD Memory Card access is in progress).
     The SD BUSY indicator is lit when the SD Memory Card is accessed from user the programming or from a computer through FTP.
  b) Do not remove the SD Memory Card while the SD BUSY indicator is lit or the SD PWR indicator is lit (i.e., while SD Memory Card power is supplied).
     Press the SD Memory Card power supply switch and confirm that the SD BUSY indicator or SD PWR indicator is not lit before you remove the SD Memory Card.
- Never insert the SD Memory Card facing the wrong way.
  If the SD Memory Card is inserted forcibly, it may become unusable.
- To format the SD Memory Card (e.g., to delete all of the data), insert the SD Memory Card in the CPU Unit and perform the operation from the Sysmac Studio.
- The SD Memory Card uses flash memory, and so its service life is limited. When the end of the SD Memory Card's service life approaches, the ability to write data is lost, and data is sometimes not retained after writing. The service life depends on the size of the data that is written and on the ambient temperature. For the unlikely event that data is lost, it is recommended to periodically back up data.
- The service life may be extremely short if a non-OMRON SD Memory Card is used. Also, operation may be affected due to deterioration in writing performance.

- If you use an OMRON SD Memory Card, the end of the life of the SD Memory Card can be detected in the following ways.
  a) System-defined variable *_Card1Deteriorated* (SD Memory Card Life Warning Flag)
  b) *SD Memory Card Life Exceeded (Observation)* event in the event log

Version Information

Combination of the CPU Unit version and SD Memory Card determines whether the SD memory card life expiration detection function can be used or not. Refer to *Specifications of Supported SD Memory Cards, Folders, and Files* in the *NJ/NX-series CPU Unit Software User's Manual (Cat. No. W501)* for details.

Installing the SD Memory Card

1 Pull the left side of the SD Memory Card cover forward and remove from the Unit.

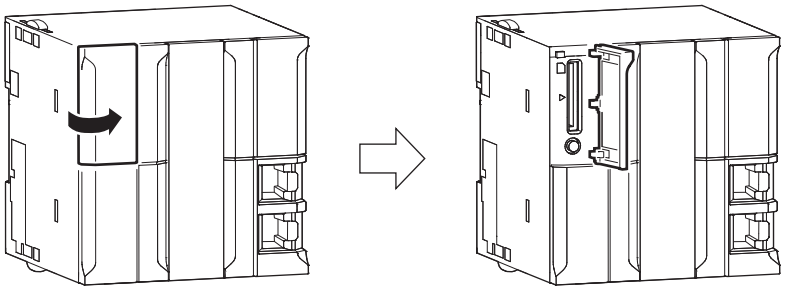

2 Insert the SD Memory Card with the label facing to the left.
(Insert the SD Memory Card with the label facing the triangle on the CPU Unit.)

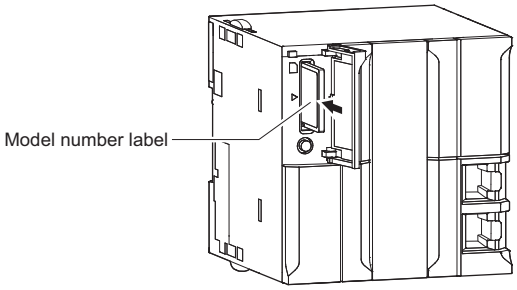

3 Push the SD Memory Card securely into the compartment.

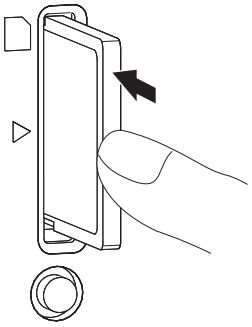

Removing the SD Memory Card

1 Press the SD Memory Card power supply switch (SD PWR).

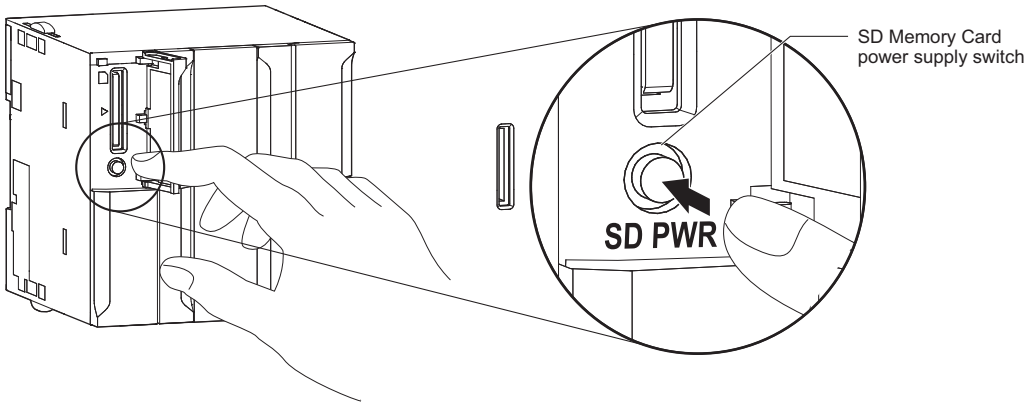

2 Press the SD Memory Card after the SD BUSY indicator is no longer lit.
The SD Memory Card will be ejected from the compartment.

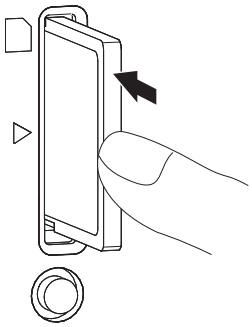

3 Pull out the SD Memory Card.

4 Close the Memory Card cover when an SD Memory Card is not being used.

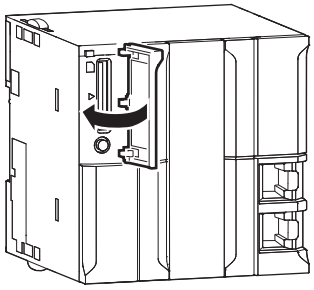

3-3 Power Supply Units

3-3-1 Models and Specifications

NJ-series Power Supply Units

Use an NJ-series Power Supply Unit to supply power to an NJ-series CPU Rack or Expansion Rack.

Precautions for Safe Use

- Do not use the Power Supply Units in the system beyond the rated supply capacity range given in the following specifications.
  Doing so may result in operation stopping, incorrect operation, or failure to correctly back up required data at power interruptions.
- Use only NJ-series Power Supply Units on NJ-series CPU Racks and Expansion Racks.
  Operation is not possible if you use a CJ-series Power Supply Unit with an NJ-series CPU Unit or an NJ-series Power Supply Unit with a CJ-series CPU Unit.

Item	Specifications	
Model	NJ-PA3001	NJ-PD3001
Supply voltage	100 to 240 VAC (wide-range), 50/60 Hz	24 VDC
Operating voltage and frequency ranges	85 to 264 VAC, 47 to 63 Hz	19.2 to 28.8 VDC
Power consumption	120 VA max.	60 W max.
Inrush current*1	At 100 VAC: 20 A/8 ms max. for cold start at room temperature 8 ms max. At 200 VAC: 40 A/8 ms max. for cold start at room temperature 8 ms max.	At 24 VDC: 30 A/20 ms max. for cold start at room temperature 20 ms max.
Output capacity*2	5 VDC, 6.0 A (including supply to CPU Unit using CPU Rack) 5 VDC, 6.0 A (using Expansion Rack) 24 VDC, 1.0 A Total: 30 W max.	
Output terminal (service supply)	Not provided	
RUN output*3	Contact configuration: SPST-NO Switch capacity: 250 VAC, 2 A (resistive load) 120 VAC, 0.5 A (inductive load) 24 VDC, 2A (resistive load)	
Replacement notification function	Not provided.	
Insulation resistance*4	20 MΩ min. (at 500 VDC) between AC external and GR terminals	20 MΩ min. (at 500 VDC) between DC external and GR terminals

Item	Specifications	
Dielectric strength*4*5	2,300 VAC 50/60 Hz for 1 min between AC external and GR terminals Leakage current: 10 mA max.	1,000 VAC 50/60 Hz for 1 min between DC external and GR terminals Leakage current: 10 mA max.
Noise immunity	2 kV on power supply line (Conforms to IEC 61000-4-4.)	
Vibration resistance	5 to 8.4 Hz, 3.5-mm amplitude, 8.4 to 150 Hz, acceleration: 9.8 m/s^2 in X, Y, and Z directions for 100 minutes (Time coefficient: 10 minutes × coefficient factor 10 = total time 100 min.) (according to IEC 60068-2-6) Gravity acceleration is assumed to be $G=9.8m/s^2$.	
Shock resistance	147 m/s^2 3 times each in X, Y, and Z directions (Relay Output Unit: 100 m/s^2) (according to IEC 60068-2-27) Gravity acceleration is assumed to be $G=9.8m/s^2$.	
Ambient operating temperature	0 to 55°C	
Ambient operating humidity	10% to 90% (with no condensation)	
Atmosphere	Must be free from corrosive gases.	
Ambient storage temperature	-20 to 75°C	

*1. The AC and DC values above are given for a cold start, and the AC values are at room temperature.
The AC inrush control circuit uses a thermistor element with a low-temperature current control characteristic. If the ambient temperature is high or the Controller is hot-started, the thermistor will not be sufficiently cool, and the inrush current given in the table may be exceeded by up to twice the given value.
The DC inrush control circuit uses a capacitor-charging delay circuit.
If the power is OFF for only a short time for a hot-start, the capacitor will not sufficiently discharge and the inrush current given in the table may be exceeded by up to twice the given value. An inrush current of approximately 4 A may occur and continue for 1 s when the power is turned ON.
When selecting fuses, breakers, and external DC power supply devices for external circuits, allow sufficient margin in shut-off performance.

*2. Internal components in the Power Supply Unit will deteriorate or be damaged if the Power Supply Unit is used for an extended period of time exceeding the power supply output capacity or if the outputs are shorted.

*3. Supported only when mounted to CPU Rack.

*4. The tests can also be performed with the LG terminal and GR terminal connected to each other.

*5. Change the applied voltage gradually using the adjuster on the Tester. If the full dielectric strength voltage is applied or turned OFF using the switch on the Tester, the generated impulse voltage may damage the Power Supply Unit.

3-3-2 Components and Functions

NJ-PA3001

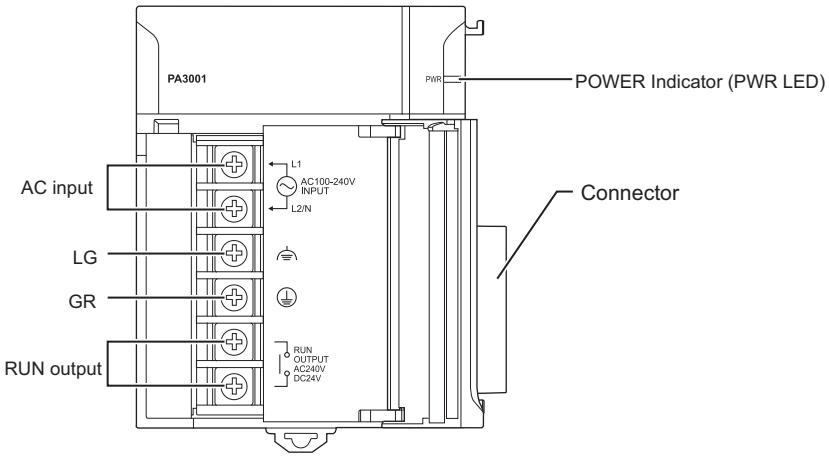

NJ-PD3001

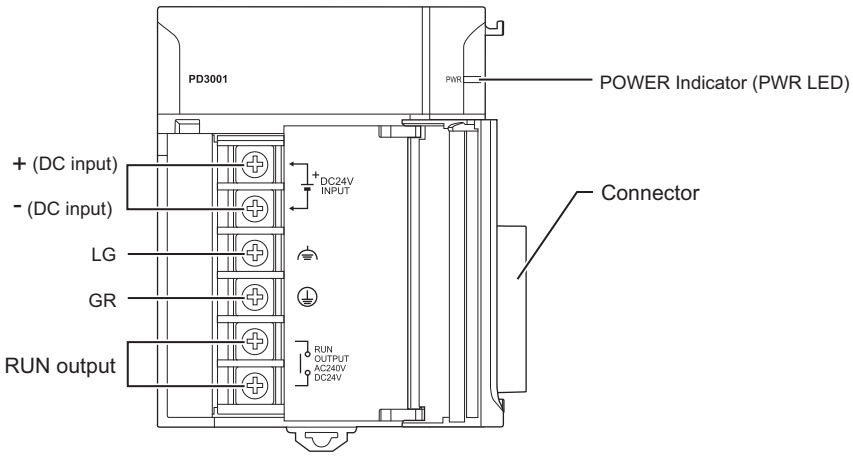

AC Input

Supply 100 to 240 VAC (allowable: 85 to 264 VAC).
The NJ-PA3001 has a wide input range, so it does not have voltage switching terminals.

DC Input

Supply 24 VDC (allowable: 19.2 to 28.8 VDC.)

LG

LG terminal is a noise-filtered neutral terminal to increase noise resistance.

GR

GR terminal is a ground terminal to prevent electrical shock.

RUN Output (NJ-PA3001/-PD3001)

The internal contacts for the RUN output turn ON when the CPU Unit is in RUN status.
The following operation occurs.

Status	Operation
In operation (RUN mode).	ON
The CPU Unit is starting (until entering the operating status that is specified in the Startup Mode setting).	OFF
Operation stopped (PROGRAM mode).	
Controller error in the major fault level occurred.	

The Power Supply Unit must be on the CPU Rack to use this output.

3-3-3 Selecting a Power Supply Unit

First select the Power Supply Unit according to whether it can be used on the CPU Rack, the power supply voltage, and the need for a RUN output. Then check the following table to make sure that the current consumption and power consumption requirements of each Rack are met.

Model	Power supply voltage	Output current			Output capacity	RUN output	Replacement notification function	CPU Rack	Expansion Rack
		5-VDC CPU Racks*1	5-VDC Expansion Rack	24 VDC					
NJ-PA3001	100 to 240 VAC	6.0 A	6.0 A	1.0 A	30 W	Yes	No	Yes	Yes
NJ-PD3001	24 VDC	6.0 A	6.0 A	1.0 A	30 W	Yes	No	Yes	Yes

*1. Including supply to the CPU Unit.

Refer to *CPU Rack* on page 2-5, *Expansion Racks* on page 2-10, and *CJ-series Configuration Units* on page 2-12 for Unit current consumptions.
Refer to Rack Current Consumption and Width Display on for the procedure to check the current and power consumptions for each Rack from the Sysmac Studio.

Calculating Unit Current Consumption

The amount of current/power that can be supplied to the Units mounted in a Rack is limited by the capacity of the Rack's Power Supply Unit. Refer to the following tables when designing your system so that the total current consumption of the mounted Units does not exceed the maximum current for each voltage group and the total power consumption does not exceed the maximum power supplied by the Power Supply Unit.

Refer to *CPU Rack* on page 2-5, *Expansion Racks* on page 2-10, and *CJ-series Configuration Units* on page 2-12 for the current consumptions of the Units to use in the Unit current consumption calculations.

● Maximum Current and Power Supplied by Power Supply Units

The following table shows the maximum currents and power that can be supplied by Power Supply Units in CPU Racks and Expansion Racks.

Note When calculating current/power consumption in a CPU Rack, be sure to include the power required by the CPU Unit itself, as well as the I/O Control Unit if one or more Expansion Racks is connected.
Be sure to include the power required by the I/O Interface Unit when calculating current/power consumption in an Expansion Rack.

Model	Output current			Output capacity
	5-VDC CPU Rack*1	5-VDC Expansion Rack	24 VDC	
NJ-PA3001	6.0 A	6.0 A	1.0 A	30 W
NJ-PD3001	6.0 A	6.0 A	1.0 A	30 W

*1. Including supply to the CPU Unit.

● Example Calculations

Example 1: In this example, the following Units are mounted to a CPU Rack with an NJ-PA3001 Power Supply Unit.

Unit	Model	Quantity	Voltage group	
			5-V	24-V
CPU Unit	NJ501-1500	1 unit	1.90 A	---
I/O Control Unit	CJ1W-IC101	1 unit	0.02 A	---
Input Units	CJ1W-ID211	2 units	0.08 A	---
	CJ1W-ID231	2 units	0.09 A	---
Output Unit	CJ1W-OC201	2 units	0.09 A	0.048 A
Special I/O Unit	CJ1W-DA041	1 unit	0.12 A	---
CPU Bus Unit	CJ1W-SCU22	1 unit	0.28 A	---
Current consumption	Calculation		1.9 A + 0.02 A + 0.08 A × 2 + 0.09 A × 2 + 0.09 A × 2 + 0.12 A + 0.28 A	0.048 A × 2
	Result		2.84 A (≤6.0 A)	0.096 A (≤1.0 A)
Power consumption	Calculation		2.84 A × 5 V = 14.2 W	0.096 A × 24 V = 2.3 W
	Result		14.2 W + 2.30 W = 16.5 W (≤30 W)	

Example 2: In this example, the following Units are mounted to a CJ-series Expansion Rack with an NJ-PA3001 Power Supply Unit.

Unit	Model	Quantity	Voltage group	
			5-V	24-V
I/O Interface Unit	CJ1W-II101	1 unit	0.13 A	---
Input Unit	CJ1W-ID211	2 units	0.08 A	---
Output Unit	CJ1W-OD231	8 units	0.14 A	---
Current consumption	Calculation		0.13 A + 0.08 A × 2 + 0.14 A × 8	---
	Result		1.41 A (≤6.0 A)	---
Power consumption	Calculation		1.41 A × 5 V = 7.1 W	---
	Result		7.1 W (≤30 W)	

Additional Information

Rack Current Consumption and Width Display

The width, current consumption, and power consumption for each Rack are displayed on the right side of the **CPU/Expansion Racks** Tab Page in the **Controller Configurations and Setup** of the Sysmac Studio.

Click to display the information for the Rack.

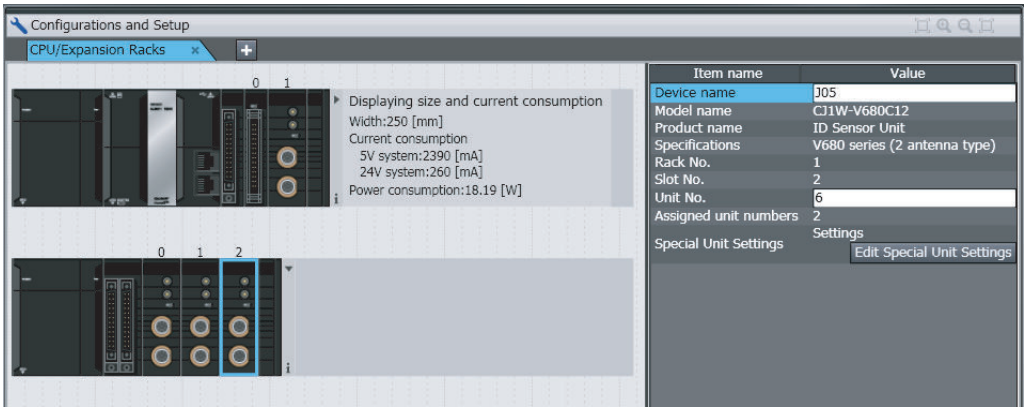

If the capacity of a Power Supply Unit is exceeded, the display will turn red.

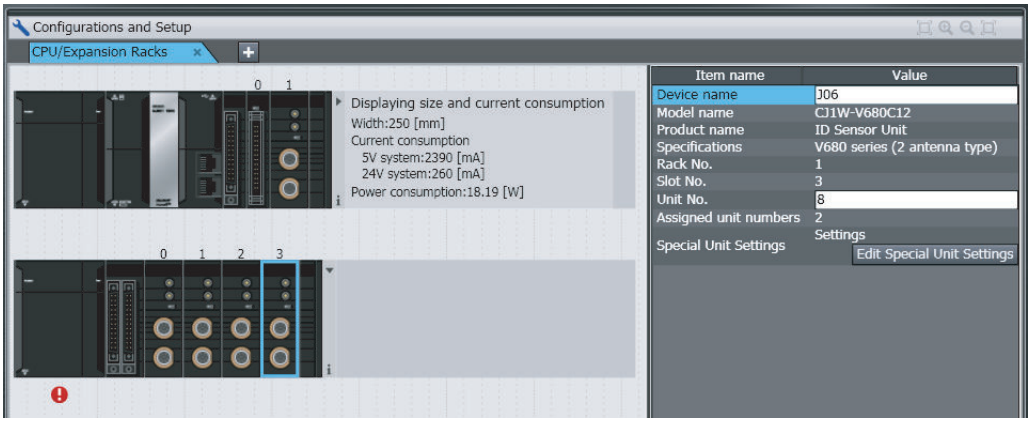

Calculating Power Consumption

The ambient operating temperature at the control panel where an NJ-series Controller is mounted must be no higher than 55°C.

This section describes how to calculate the power consumption of a CPU Rack or Expansion Rack for use in the thermal design of the control panel.

● Calculating Power Consumption

Use the following equation to calculate the average power consumption (W) of an NJ-series CPU Rack.

W = W_Gross + W_IO_ONOFF

- W_IO_ONOFF: Basic I/O Unit power consumption (Power supplied to Basic I/O Units from Units other than the Power Supply Unit.)
- W_Gross: Total power consumption of the Controller (Power supplied to the Controller from the Power Supply Unit and loss in Power Supply Unit.)

● Total Power Consumption of the Controller (W_Gross)

The Controller power consumption is calculated based on the total power consumption of the Units that are mounted in the CPU Unit and the power conversion rate of the Power Supply Unit.

W_Gross = W_unit ÷ η

- W_unit:
  Total power consumption of Units mounted to the CPU Rack.
  For details on the current consumption and voltage of individual Units, refer to *CJ-series Configuration Units* on page 2-12.
- η:
  Power Supply Unit power conversion rate.
  The rate is 70% for the NJ Series, so use "0.7" in the calculation.

● Basic I/O Unit Power Consumption (W_IO_ONOFF)

The Basic I/O Unit power consumption is the total consumption for the Input Units and the Output Units.

- **Input Units**
  Rated input voltage × Input current × Number of input points
- **Output Units**
  Residual voltage × Maximum load current × Number of output points

Note For a CJ-series Basic I/O Unit with transistor outputs, use a residual voltage of 0.1 V in the calculation.
For a CJ-series Basic I/O Unit with relay or triac outputs, use a residual voltage of 0 V in the calculation.

Calculation Examples

These examples show how to calculate the power consumption (W) for the following system.

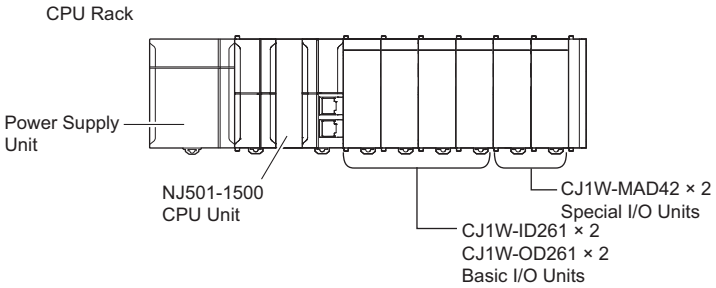

Units	Model	Quantity	5-VDC	Other
CPU Unit	NJ501-1500	1 Unit	1.90 A	---

Units	Model	Quantity	5-VDC	Other
Input Units	CJ1W-ID261	2 Units	0.09 A	Rated input voltage: 24 V Input current: 4.1 mA Number of input points: 64
Output Unit	CJ1W-OD261	2 Units	0.17 A	Residual voltage: 0.1 V Maximum load current: 6.4 A/Unit*1
Special I/O Units	CJ1W-MAD42	2 Units	0.58 A	---

*1. The maximum load current of an Output Unit is the limit for the entire Unit.

● Total Power Consumption of the Controller (W_Gross)

W_Gross = (1.9 + 0.09 × 2 + 0.17 × 2 + 0.58 × 2) A × 5 V ÷ 0.7= 25.6 W

● Basic I/O Unit Power Consumption (W_IO_ONOFF)

W_IO_ONOFF = 24 V × 0.0041 A × 64 points × 2 Units + 0.1 V × 6.4 A × 2 Units = 13.9 W

● Average Power Consumption (W)

W = W_Gross + W_IO_ONOFF = 39.5 W

3-4 CJ-series Basic I/O Units

3-4-1 Models and Specifications

● Basic Input Units

Type of Unit	Name	Specifications		Model	Page
Basic Input Units	DC Input Units	Terminal block, 12 to 24 VDC	8 inputs	CJ1W-ID201	page A-6
		Terminal block, 24 VDC	16 inputs	CJ1W-ID211	page A-8
				CJ1W-ID212	page A-10
		Fujitsu / OTAX connector, 24 VDC	32 inputs	CJ1W-ID231	page A-12
		MIL connector, 24 VDC	32 inputs	CJ1W-ID232	page A-14
				CJ1W-ID233	page A-16
		Fujitsu / OTAX connector, 24 VDC	64 inputs	CJ1W-ID261	page A-18
		MIL connector, 24 VDC	64 inputs	CJ1W-ID262	page A-20
	AC Input Units	Terminal block, 200 to 240 VAC	8 inputs	CJ1W-IA201	page A-22
		Terminal block, 100 to 120 VAC	16 inputs	CJ1W-IA111	page A-24
	Interrupt Input Unit	Terminal block, 24 VDC	16 inputs	CJ1W-INT01	page A-26
	Quick-response Input Unit	Terminal block, 24 VDC	16 inputs	CJ1W-IDP01	page A-28

● Basic Output Units

Type of Unit	Name		Specifications		Model	Page
Basic Output Units	Relay Output Units		Terminal block, 250 VAC/24 VDC, 2 A, 8 independent contacts	8 outputs	CJ1W-OC201	page A-30
			Terminal block, 250 VAC/24 VDC, 2 A	16 outputs	CJ1W-OC211	page A-32
	Triac Output Unit		Terminal block, 250 VAC/24 VDC, 0.6 A	8 outputs	CJ1W-OA201 CJ1W-OA201-1	page A-33
	Transistor Output Units	Sinking outputs	Terminal block, 12 to 24 VDC, 2 A	8 outputs	CJ1W-OD201	page A-35
			Terminal block, 12 to 24 VDC, 0.5 A	8 outputs	CJ1W-OD203	page A-37
			Terminal block, 12 to 24 VDC, 0.5 A	16 outputs	CJ1W-OD211	page A-38
			Terminal block, 24 VDC, 0.5 A	16 outputs	CJ1W-OD213	page A-39
			Fujitsu / OTAX connector, 12 to 24 VDC, 0.5 A	32 outputs	CJ1W-OD231	page A-40
			MIL connector, 12 to 24 VDC, 0.5 A	32 outputs	CJ1W-OD233	page A-42
			MIL connector, 24 VDC, 0.5 A	32 outputs	CJ1W-OD234	page A-44
			Fujitsu / OTAX connector, 12 to 24 VDC, 0.3 A	64 outputs	CJ1W-OD261	page A-46
			MIL connector, 12 to 24 VDC, 0.3 A	64 outputs	CJ1W-OD263	page A-48
		Sourcing outputs	Terminal block, 24 VDC, 2 A, load short-circuit protection, line disconnection detection	8 outputs	CJ1W-OD202	page A-50
			Terminal block, 24 VDC, 0.5 A, load short-circuit protection	8 outputs	CJ1W-OD204	page A-52
			Terminal block, 24 VDC, 0.5 A, load short-circuit protection	16 outputs	CJ1W-OD212	page A-53
			MIL connector, 24 VDC, 0.5 A, load short-circuit protection	32 outputs	CJ1W-OD232	page A-55
			MIL connector, 12 to 24 VDC, 0.3 A	64 outputs	CJ1W-OD262	page A-57

● Basic Mixed I/O Units

Type of Unit	Name		Specifications		Model	Page
Basic I/O Units	24-VDC Inputs/Transistor Output Units	Sinking output	Fujitsu / OTAX connector Inputs: 24 VDC Outputs: 12 to 24 VDC, 0.5 A	16 inputs 16 outputs	CJ1W-MD231	page A-59
			MIL connector Inputs: 24 VDC Outputs: 12 to 24 VDC, 0.5 A		CJ1W-MD233	page A-61
			Fujitsu / OTAX connector Inputs: 24 VDC Outputs: 12 to 24 VDC, 0.3 A	32 inputs 32 outputs	CJ1W-MD261	page A-63
			MIL connector Inputs: 24 VDC Outputs: 12 to 24 VDC, 0.3 A		CJ1W-MD263	page A-65
		Sourcing output	MIL connector Inputs: 24 VDC Outputs: 24 VDC, 0.5 A, load short-circuit protection	16 inputs 16 outputs	CJ1W-MD232	page A-67
	TTL I/O Units		Inputs: 5 VDC Outputs: 5 VDC, 35 mA	32 inputs 32 outputs	CJ1W-MD563	page A-69

3-4-2 Part Names and Functions

● Eight/sixteen-point Units (18-pin Terminal Blocks)

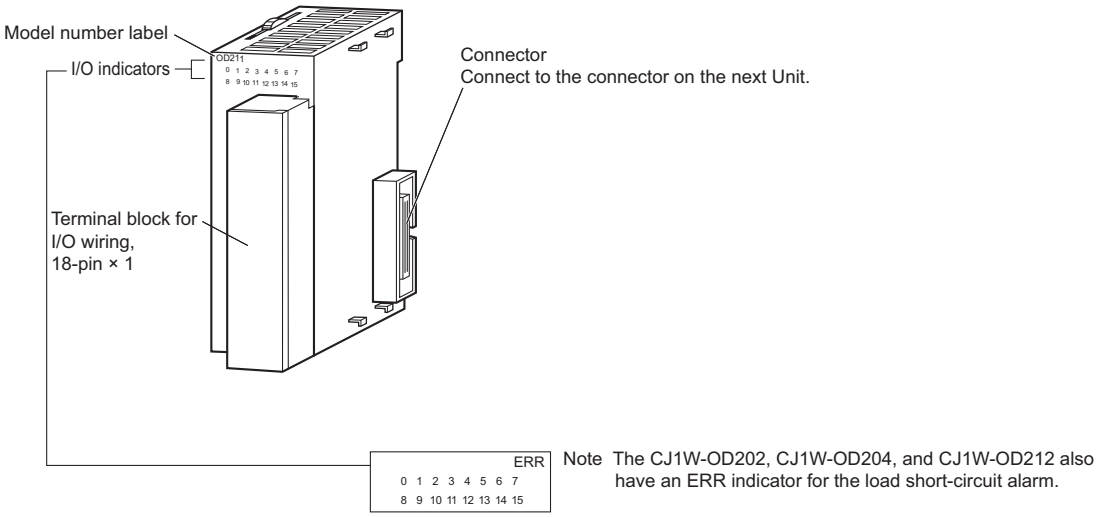

Note The CJ1W-OD202, CJ1W-OD204, and CJ1W-OD212 also have an ERR indicator for the load short-circuit alarm.

● Thirty-two-point Units with 40-pin Fujitsu / OTAX Connector or MIL Connector

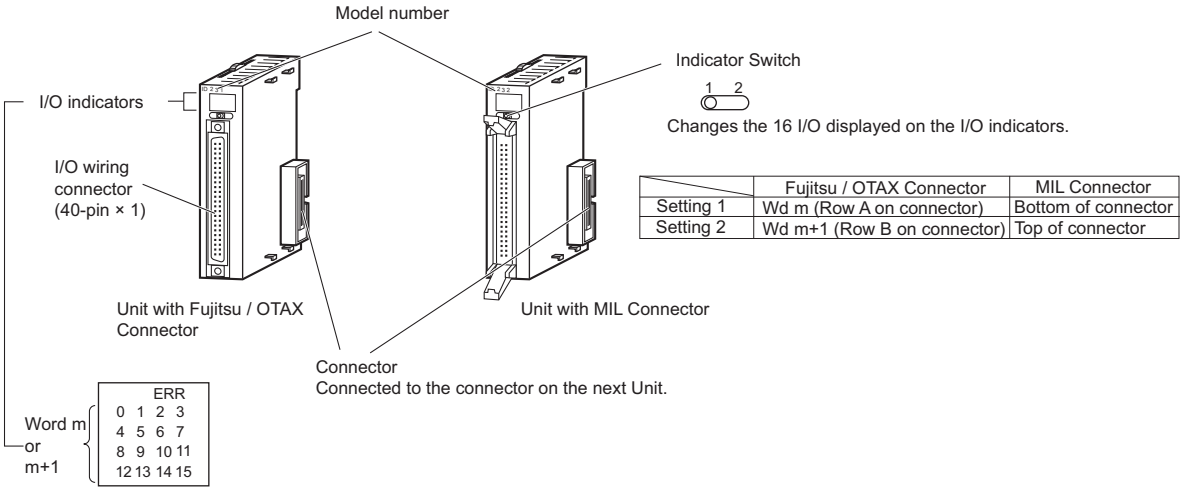

	Fujitsu / OTAX Connector	MIL Connector
Setting 1	Wd m (Row A on connector)	Bottom of connector
Setting 2	Wd m+1 (Row B on connector)	Top of connector

Note: Only the CJ1W-OD232 has an ERR indicator for the load short-circuit alarm.

● Thirty-two-point Units with 2 × 24-pin Fujitsu / OTAX Connectors or 2 × 20-pin MIL Connectors

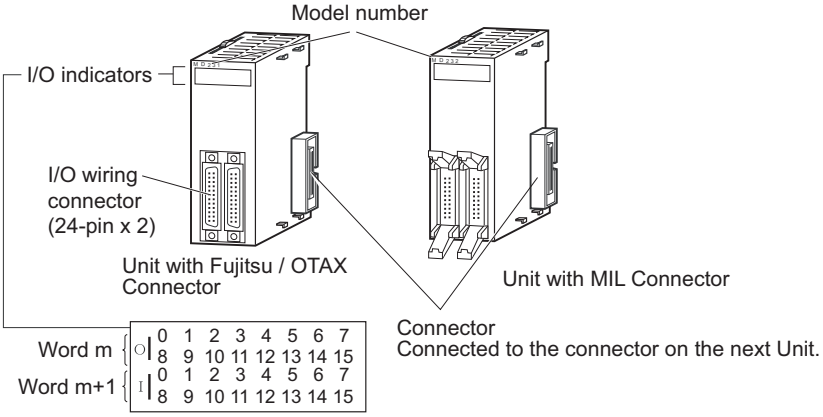

● Sixty-four-point Units with Two 40-pin Fujitsu / OTAX Connectors or MIL Connectors

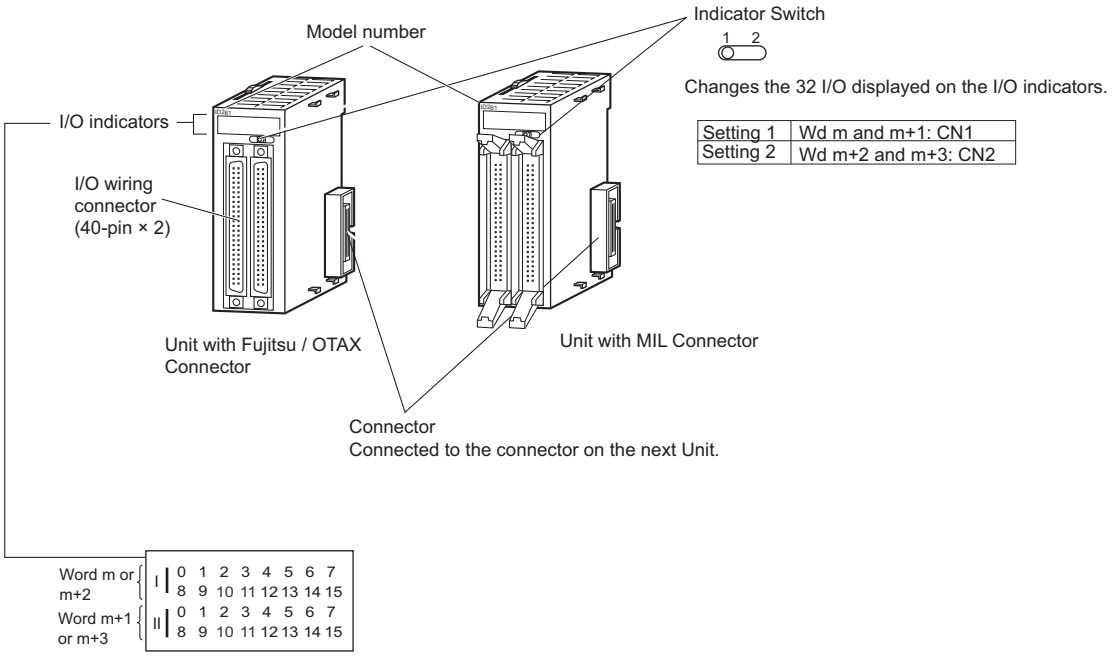

Quick-response Inputs

When you want to receive pulses that are shorter than the task period, use the CJ1W-IDP01 Quick-response Input Unit.
The quick-response inputs can receive pulses with a pulse width (ON time) of 0.05 ms for the CJ1W-IDP01 Quick-response Input Unit.

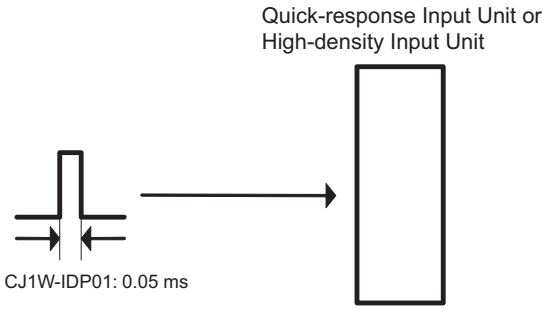

Inputs that are input to internal memory are cleared when the inputs are refreshed.

3-5 B7A Interface Ports

3-5-1 Overview

The B7A is a 1:1 transmission path that does not require a master.
A total of 16 signals are transmitted using a two-conductor or three-conductor VCTF cable (maximum length: 500 m).
The CJ1W-B7A□□ B7A Interface Unit is a CJ-series Basic I/O Unit that exchanges up to 64 points of I/O data mainly with B7A Link Terminals using a B7A transmission path.
The B7A Interface Unit and B7A Link Terminal can be used in the same way as a standard Basic I/O Unit and I/O Terminal without any need to worry about communications. This characteristic reduces the wiring when using more than one relatively remote sensor or actuator.

3-5-2 System Configuration

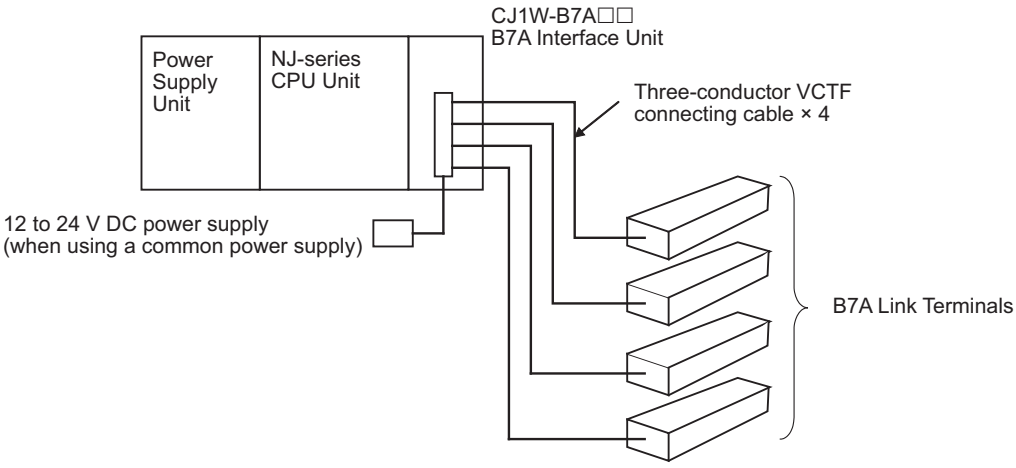

3-5-3 Models

B7A Interface Unit	Specifications	I/O words allocated to Unit	Connectable B7A Link Terminals*1
CJ1W-B7A14	64 inputs (four B7A ports)	4 input words	Inputs: Four 16-point Input Terminals, two 32-point Input Terminals, or two 16-point Input Terminals and one 32-point Input Terminal
CJ1W-B7A04	64 outputs (four B7A ports)	4 output words	Outputs: Four 16-point Output Terminals or two 32-point Output Terminals
CJ1W-B7A22	32 inputs, 32 outputs (four B7A ports)	2 input words and 2 output words	Inputs: Two 16-point Input Terminals or one 32-point Input Terminal Outputs: Two 16-point Output Terminals or one 32-point Output Terminal or Two Mixed I/O Terminals (16 inputs/16 outputs)

*1. A 10-point B7A Link Terminal cannot be connected to a B7A Interface Unit. B7A Interface Units can be connected together.

Additional Information

Wireless transmissions are possible if B7AP Power Couplers are used on a B7A transmission path, reducing the wiring required for moving objects and rotating objects.

3-5-4 B7A Communications Specifications

Item	Specifications		
Transmission method	One-way time-sharing multiplex transmissions		
Transmission delay (communications delay on transmission path)	High-speed	3 ms typical, 5 ms max.	
	Standard	19.2 ms typical, 31 ms max.	
Transmission points	CJ1W-B7A14	64 inputs (4 ports)	
	CJ1W-B7A04	64 outputs (4 ports)	
	CJ1W-B7A22	32 inputs (2 ports), 32 outputs (2 ports)	
External power supply voltage*1	12 to 24 V DC (allowable voltage range: 10.8 to 26.4 V)		
External supply current*2	CJ1W-B7A14	40 mA min.	
	CJ1W-B7A04	150 mA min.	
	CJ1W-B7A22	80 mA min.	
Minimum input time*3	High-speed	16 ms	
	Standard	2.4 ms	
Transmission distance	High-speed	Power supply on one side (common power supply)*4	10 m max.
			50 m max. (with shielded cable)
		Power supply on both sides (separate power supplies)*5	10 m max.
			100 m max. (with shielded cable)
	Standard	Power supply on one side (common power supply)*4	100 m max.
		Power supply on both sides (separate power supplies)*5	500 m max.
Cables	VCTF, 0.75 mm^2, 3 conductors (power supply on one side (common power supply))*4 VCTF, 0.75 mm^2, 2 conductors (power supply on both sides (separate power supplies))*5 Shielded cable, 0.75 mm^2, 3 conductors (power supply on one side (common power supply))*4 Shielded cable, 0.75 mm^2, 2 conductors (power supply on both sides (separate power supplies))*5		

*1. We recommend OMRON S8□□-series Power Supply Units for the external power supplies.
*2. The capacity of the external supply current does not include the capacity required by the B7A Link Terminal.
*3. The minimum input time is the minimum time required by the B7A Interface Unit to read the input signals from the CPU Unit.
*4. When a common power supply is used, the B7A Interface Unit and B7A Link Terminal are supplied by the same external power supply.
*5. When separate power supplies are used, the B7A Interface Unit and B7A Link Terminal are supplied by separate external power supplies.

3-5-5 Common Specifications

Item	Specifications
Applicable Controllers	NJ Series
Unit classification	CJ-series Basic I/O Unit
Transmission delay	Standard (19.2 ms typical) or high-speed (3 ms typical), switchable (Switchable by using the setting switch on the front panel. Settings are read when power is turned ON or Unit is restarted.) Factory setting: Standard (19.2 ms typical) Note: A transmission error will occur if B7A Link Terminals with different transmission delay times are connected to each other.
Transmission error input bit status processing	HOLD (The bit status from immediately before the transmission error is held.)
Settings	Front panel Setting switch: Standard (19.2 ms typical) or high-speed (3 ms typical), switchable
Indicators	5 LED indicators: RUN (B7A operating status), ERR1 (port 1 communications error), ERR2 (port 2 communications error), ERR3 (port 3 communications error), ERR4 (port 4 communications error)
Front panel connection	Connector with clamps
Current consumption	5 V DC: 70 mA max. (supplied from Power Supply Unit)
Weight	80 g max.

3-5-6 B7A Interface Port I/O Types

The B7A Interface Units are CJ-series Basic I/O Units.
The B7A Interface Ports use the following I/O types.
Access is performed from the user program using variables.
For information on how to allocate variables, refer to the *NJ/NX-series CPU Unit Software User's Manual (Cat. No. W501)*.

Port number	I/O type		
	CJ1W-B7A14	CJ1W-B7A04	CJ1W-B7A22
	64-point Input Unit	64-point Output Unit	64-point I/O Unit
1	Inputs	Outputs	Outputs
2	Inputs	Outputs	Outputs
3	Inputs	Outputs	Inputs
4	Inputs	Outputs	Inputs

3-5-7 Parts and Names

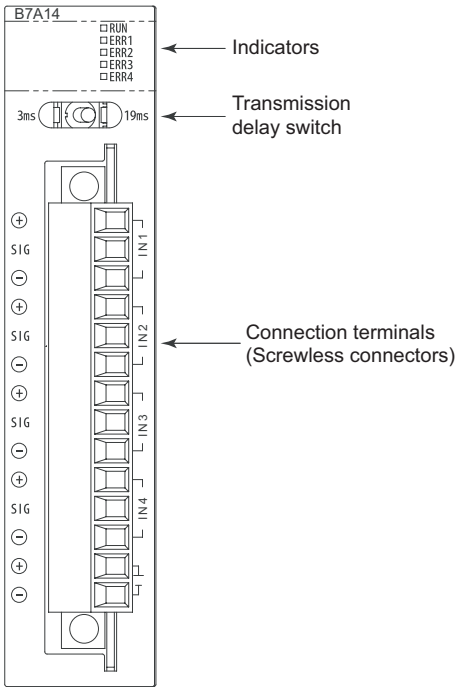

● Indicators

- CJ1W-B7A14

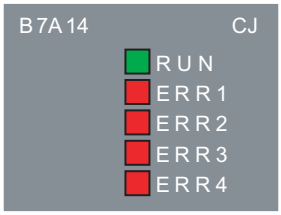

Indicator	Name	Color	Status	Condition
RUN	B7A operating status	Green	Lit	The B7A Unit is operating.
			Not lit	The B7A Unit is stopped.
ERR1	Port 1 transmission error	Red	Lit	A transmission error has occurred at port 1 of the B7A Unit.
			Not lit	The Unit is operating normally.
ERR2	Port 2 transmission error	Red	Lit	A transmission error has occurred at port 2 of the B7A Unit.
			Not lit	The Unit is operating normally.
ERR3	Port 3 transmission error	Red	Lit	A transmission error has occurred at port 3 of the B7A Unit.
			Not lit	The Unit is operating normally.
ERR4	Port 4 transmission error	Red	Lit	A transmission error has occurred at port 4 of the B7A Unit.
			Not lit	The Unit is operating normally.

- CJ1W-B7A04

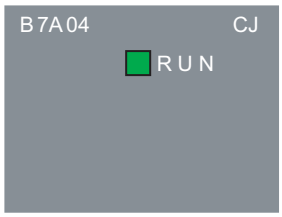

Indicator	Name	Color	Status	Condition
RUN	B7A operating status	Green	Lit	The B7A Unit is operating.
			Not lit	The B7A Unit is stopped.

- CJ1W-B7A22

Indicator	Name	Color	Status	Condition
RUN	B7A operating status	Green	Lit	The B7A Unit is operating.
			Not lit	The B7A Unit is stopped.
ERR1	Port 3 transmission error	Red	Lit	A transmission error has occurred at port 3 of the B7A Unit.
			Not lit	The Unit is operating normally.
ERR2	Port 4 transmission error	Red	Lit	A transmission error has occurred at port 4 of the B7A Unit.
			Not lit	The Unit is operating normally.

● Transmission Delay Switch

3 ms 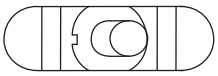 19 ms

Name	Function	Factory setting
Transmission delay switch	The same baud rate is set for all ports using this one switch. Right: Standard (19.2 ms typical) Left: High-speed (3 ms typical)	Standard

Note The switch setting is read when the power supply is turned ON.
If the switch setting is changed after turning ON the power supply, the new setting is not used.

3-5-8 Transmission Error Processing

B7A Interface Input Ports

The B7A Interface Unit detects transmission errors at the input ports. When a transmission error is detected at an input port, the corresponding indicator and Transmission Error Flag turn ON.

Indicators

When transmission errors occur at B7A interface input ports, the ERR1 to ERR4 indicators on the front panel will turn ON according to the port where the error occurred.

Port where error occurred	CJ1W-B7A14	CJ1W-B7A04	CJ1W-B7A22
Port 1	ERR1	---	---
Port 2	ERR2	---	---
Port 3	ERR3	---	ERR1
Port 4	ERR4	---	ERR2

Transmission Error Notification Variables

The following bits in the Basic I/O Unit Information system-defined variables that are allocated to the I/O ports of the Units will change to TRUE when a transmission error occurs.

- Example: Rack 0, Slot 0

B7A interface port	CJ1W-B7A14	CJ1W-B7A04	CJ1W-B7A22
Port 1	_CJB_IOUnitInfo[0, 0, 0]	---	---
Port 2	_CJB_IOUnitInfo[0, 0, 1]	---	---
Port 3	_CJB_IOUnitInfo[0, 0, 2]	---	_CJB_IOUnitInfo[0, 0, 0]
Port 4	_CJB_IOUnitInfo[0, 0, 3]	---	_CJB_IOUnitInfo[0, 0, 1]

- Example: Rack 0, Slot 1

B7A interface port	CJ1W-B7A14	CJ1W-B7A04	CJ1W-B7A22
Port 1	_CJB_IOUnitInfo[0, 1, 0]	---	---
Port 2	_CJB_IOUnitInfo[0, 1, 1]	---	---
Port 3	_CJB_IOUnitInfo[0, 1, 2]	---	_CJB_IOUnitInfo[0, 0, 0]
Port 4	_CJB_IOUnitInfo[0, 1, 3]	---	_CJB_IOUnitInfo[0, 0, 1]

Transmission Error Input Status Processing

If a transmission error occurs at an input port, the status of the input bit in the CPU Unit variable from immediately before the transmission error is held. When transmission returns to normal, the signals that have been normally received will be input to the input bit.

B7A Interface Output Ports

The B7A Interface Unit does not detect transmission errors at output ports. Detect output port transmission errors at the B7A Link Terminal that is connected to the B7A Interface Unit.

3-6 CJ-series I/O Control Units and I/O Interface Units

An I/O Control Unit and I/O Interface Units are used to connect Expansion Racks to the NJ-series CPU Rack to expand the system.

3-6-1 Models and Specifications

● I/O Control Unit

Model	Specifications
CJ1W-IC101	The I/O Control Unit is required to connect a CJ-series Expansion Rack to an NJ-series CPU Rack. The I/O Control Unit must be connected immediately to the right of the CPU Unit. Connect to the I/O Interface Unit (CJ1W-II101) on the first Expansion Rack with a CS/CJ-series I/O Connecting Cable.

● I/O Interface Unit

Model	Specifications
CJ1W-II101	One Interface Unit is required for each CJ-series Expansion Rack. One End Cover is provided with each Unit.

3-6-2 Component and Functions

CJ1W-IC101
I/O Control Unit

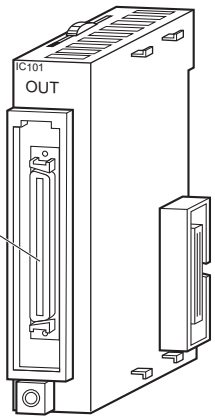

CJ1W-II101
I/O Interface Unit

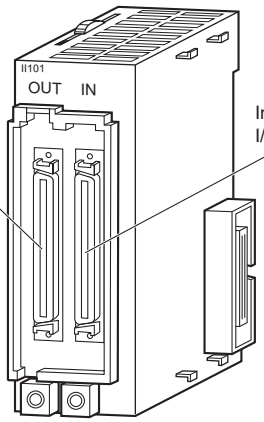

Precautions for Correct Use

Attach the enclosed cover to the I/O Connecting Cable connector on the I/O Interface Unit when it is not being used to protect it from dust.

3-7 Sysmac Studio

The Sysmac Studio is a Support Software package that provides an integrated development environment to design, program, debug, and maintain SYSMAC NJ-series Controllers.

3-7-1 Model Numbers

The model numbers of the Sysmac Studio Standard Edition are given in the following table. The model numbers are different for the media and licenses.

Product	Configuration software	Media	Number of user licenses	Model
Sysmac Studio Standard Edition	• Sysmac Studio The following Support Software is also included. • Network Configurator • CX-Integrator • CX-Protocol • CX-Designer	DVD	---	SYSMAC-SE200D
		Licenses	1	SYSMAC-SE201L
			3	SYSMAC-SE203L
			10	SYSMAC-SE210L

3-7-2 Connection

With an NJ-series CPU Unit, you can connect the Sysmac Studio online in the following ways.

Configuration

● Connecting by USB

• Direct Connection

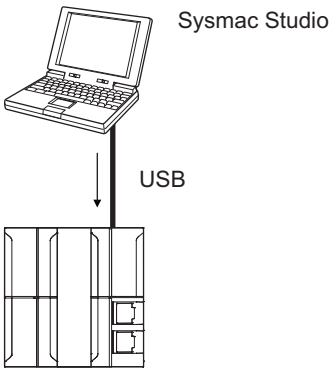

The connection device does not need to be specified.

• Connection to CPU Unit on EtherNet/IP with USB

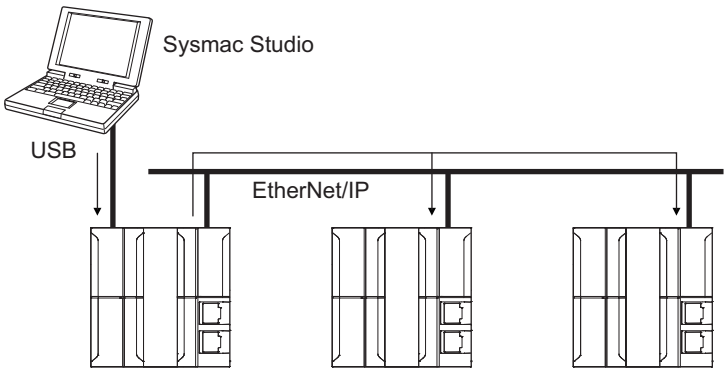

Directly specify the IP address of the remote device.

Note Connect a computer and the CPU Unit with a USB 2.0 certified cable. Do not use a USB hub to connect them.

● Connection with EtherNet/IP

- 1:1 Connection

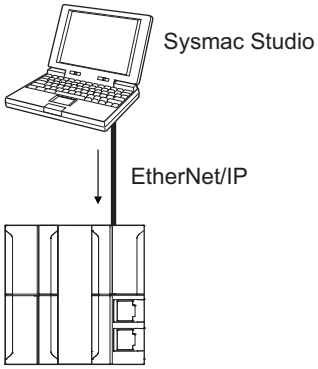

- A direct connection is made from the Sysmac Studio. The IP address and connection device do not need to be specified.
- You can make the connection whether or not a switching hub is used.
- Support for Auto-MDI enables the use of cross cables or straight cables if a direct connection is made.

- 1:N Connection

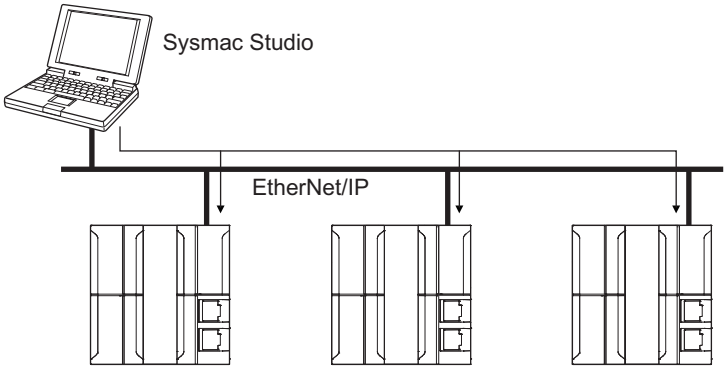

Directly specify the IP address of the remote device.

Additional Information

The Sysmac Studio cannot connect online to an NJ-series CPU Unit in the following type of configuration.

- If the built-in EtherNet/IP port is not used, you cannot connect to an NJ-series CPU Unit on an EtherNet/IP network.

Example: Connection through an EtherNet/IP Unit

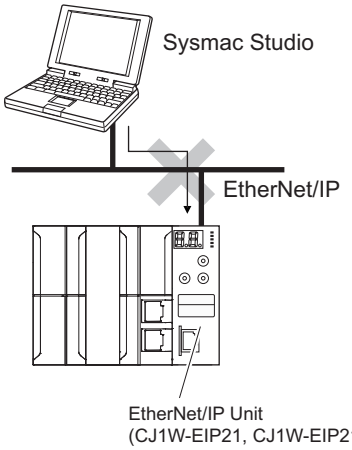

Example: Connection to NJ-series CPU Unit Routing through an EtherNet/IP Unit or Built-in Port

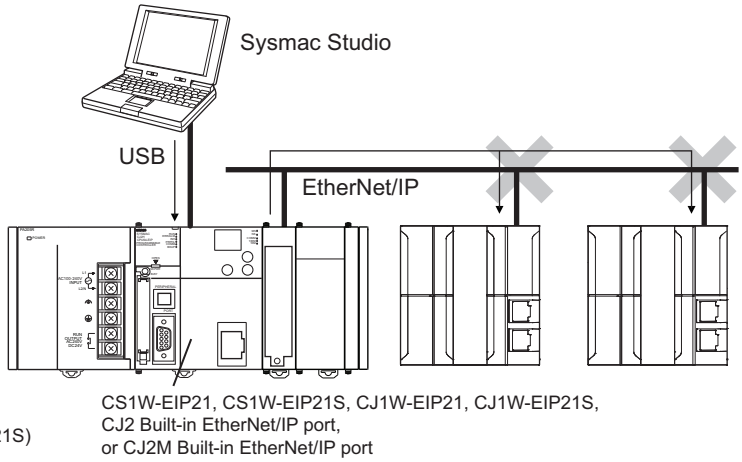

- You cannot route through any networks other than EtherNet/IP networks.

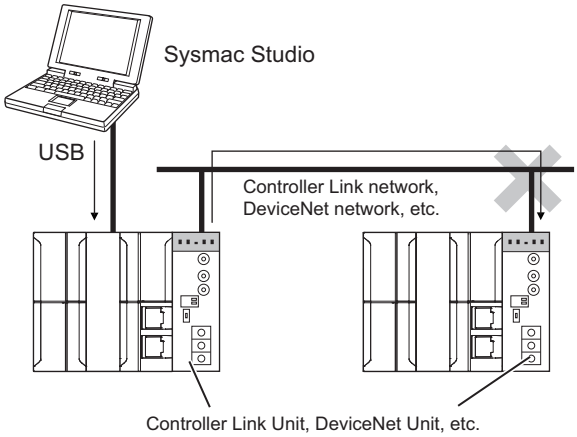

4

Installation and Wiring

This section describes how to install and wire the CPU Unit and Configuration Units.

4-1 Processing at Power ON and Power OFF 4-2
4-1-1 Power ON Operation 4-2
4-1-2 Power OFF Operation 4-3
4-1-3 Resetting the Controller from the Sysmac Studio 4-6

4-2 Fail-safe Circuits 4-7
4-2-1 Order of Powering Up the Controller and Controlled System 4-7

4-3 Mounting Units 4-10
4-3-1 Installation in a Control Panel 4-10
4-3-2 Connecting Controller Components 4-16
4-3-3 DIN Track Installation 4-18
4-3-4 Connecting CJ-series Expansion Racks 4-21
4-3-5 Assembled Appearance and Dimensions 4-24

4-4 Wiring 4-28
4-4-1 Power Supply Wiring 4-28
4-4-2 Wiring the Built-in EtherCAT Port 4-34
4-4-3 Wiring CJ-series Basic I/O Units with Terminal Blocks 4-34
4-4-4 Wiring CJ-series Basic I/O Units with Connectors 4-35
4-4-5 Connecting to Connector-Terminal Block Conversion Units or I/O Relay Terminals 4-40
4-4-6 Connecting I/O Devices 4-42
4-4-7 Wiring the Built-in EtherCAT Port 4-46
4-4-8 Wiring B7A Interface Units 4-47

4-5 Control Panel Installation 4-53
4-5-1 Temperature 4-53
4-5-2 Humidity 4-54
4-5-3 Vibration and Shock 4-55
4-5-4 Atmosphere 4-55
4-5-5 Electrical Environment 4-56
4-5-6 Grounding 4-60

4-1 Processing at Power ON and Power OFF

⚠ WARNING

- Do not touch the terminal section while power is ON. Electrical shock may occur.
- Do not disassemble any of the Units. Particularly the Power Supply Units contain parts with high voltages when power is ON or immediately after power is turned OFF. Electrical shock may occur. There are also sharp internal parts that may cause injury.

4-1-1 Power ON Operation

Precautions for Safe Use

It takes approximately 10 to 20 s to enter RUN mode after the power supply is turned ON. The outputs during this period will behave according to the slave and Unit specifications. Use the RUN output on the Power Supply Unit, for example, to implement fail-safe circuits so that external devices do not operate incorrectly.

Operation until Operation Ready Status

The CPU Unit will enter operation-ready status after the following time elapses once power supply to the Power Supply Unit starts.
The RUN indicator will flash at a 1-s interval until operation-ready status is entered. (During that time, the Controller will be in *startup* status.)

- CPU Unit Startup Time at Power ON
  It takes approximately 10 to 20 seconds for the CPU Unit to start up. The startup time depends on the slave/Unit configuration,[*1] user program, SD Memory Card usage, SD Memory Card self-diagnosis usage,[*2] etc.

*1. Some EtherCAT slaves can set a maximum standby time of 30 to 200 s. For the CPU Unit, however, operation-ready status exists as soon as the EtherCAT Master Function Module is functioning, regardless of the standby time of the EtherCAT Slaves.
For the EtherCAT Master Function Module, slaves that do not start within the maximum waiting time are treated as having an error.

*2. This function performs self-diagnosis on the inserted SD Memory Card.
This is executed if the SD Memory Card self-diagnosis setting is set to enable execution of self-diagnosis in the **Operation Settings** in the **Controller Configurations and Setup** in the Sysmac Studio.

Additional Information

The CPU Unit internally performs initialization when the power to the Controller is turned ON. The following processing is performed for initialization.

Process	Description
Self diagnosis at startup	Operation is monitored for the following errors: *Power Supply Error*, *CPU Unit Reset*, *CPU Unit Watchdog Timer Error*, and *Incorrect Power Supply Unit Connected*.*1
Data check	The *_RetainFail* (Retention Failure Flag) system-defined variable changes to TRUE at the following time: when the values of variables for which the Retain attribute was set to retain the values and the values in DM, EM, and HR Areas in the memory used for CJ-series Units were not retained after a power interruption.
Detecting CJ-series Units	The CJ-series Units mounted in the Controller are detected.
Recording Power Turned ON and Power Interrupted events	The Power Turned ON and Power Interrupted events are recorded.

*1. Refer to the *NJ/NX-series Troubleshooting Manual (Cat. No. W503)* for information on the following errors: *Power Supply Error*, *CPU Unit Reset*, *CPU Unit Watchdog Timer Error*, and *Incorrect Power Supply Unit Connected*.

Operating Mode at Startup

The system will immediately enter RUN mode if RUN mode (default) is set as the startup operating mode. The system will immediately enter PROGRAM mode if PROGRAM mode is set as the startup operating mode.

・RUN Mode Set as Startup Mode

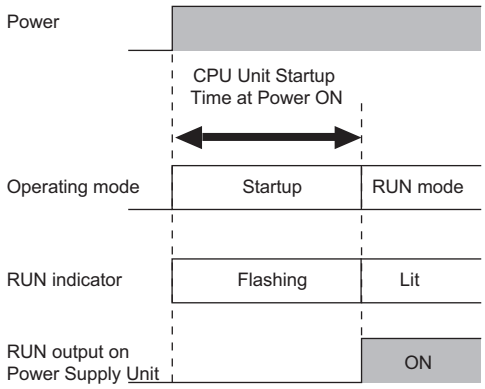

・PROGRAM Mode Set as Startup Mode

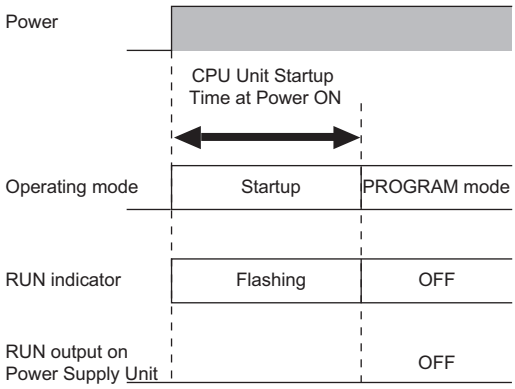

4-1-2 Power OFF Operation

⚠ WARNING

The NJ-series Controller continues normal operation for a specific period of time even when a momentary power interruption occurs. The Controller may therefore receive incorrect signals from external devices that are affected by the momentary power interruption.
Take suitable actions, such as external fail-safe measures and interlock conditions, to monitor the power supply voltage of the external devices as required.

Different operations will be performed when the power is turned OFF depending on whether the power interruption time is longer than the *power OFF detection time*, as described below.

The following table gives the voltage conditions for a power interruption.

Power Supply Unit model	Power supply input	Power interruption voltage
NJ-PA3001	100 to 200 VAC	85 VAC max.
NJ-PD3001	24 VDC	19.2 VDC max.

The setting ranges for the power OFF detection time are given in the following table.

Power supply type	Power OFF detection time
AC power supply	30.5 to 45.5 ms
DC power supply	22.5 to 25.5 ms

Operation at Power OFF Operation

Execution of the user program is ended if a power interruption exceeds the power OFF detection time, as shown below. The processing after power interruption confirmation (described below) is performed, and then the system (i.e., CPU Unit) stops.

Power supply type	Time required for a power interruption
AC power supply	45.5 ms or longer
DC power supply	25.5 ms or longer

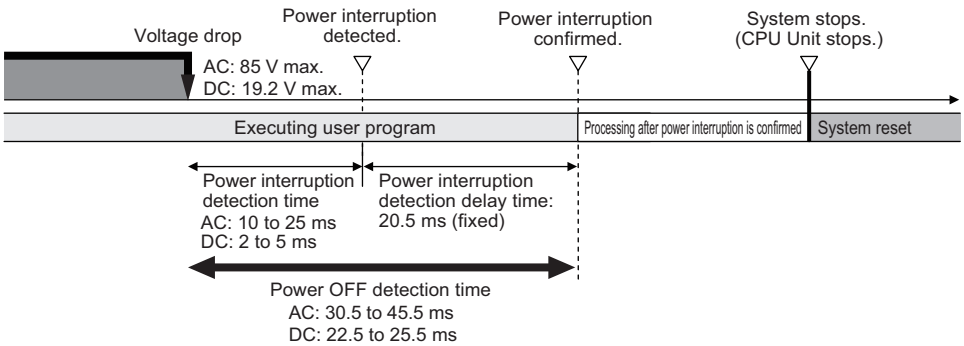

As shown in the following figure, the system (i.e. CPU Unit) will stop even if the voltage recovers after the power interruption detection time.

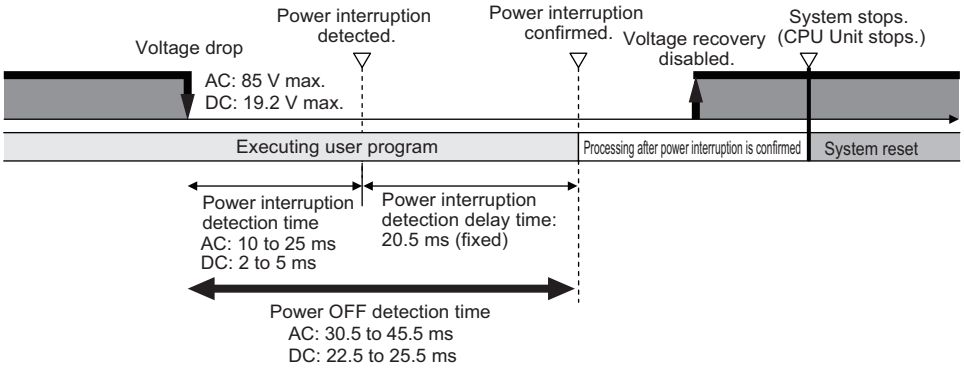

Power interruption detection time:	The time from when the input power supply voltage drops until a power interruption is detected. The power interruption is detected by the Power Supply Unit.
Power interruption detection delay time:	The standby time from when the Power Supply Unit detects the power interruption until the CPU Unit starts processing after the power interruption is confirmed.
Power OFF detection time:	The time from when the power supply voltage drops until the CPU Unit starts processing after the power interruption is confirmed. The CPU Unit continues to operate normally until the power interruption is confirmed.

Momentary Power Interruption with Continued Operation

Execution of the user program will continue if a momentary power interruption is less than the following times.

Power supply type	Momentary power interruption time with continued operation
AC power supply	30.5 ms max.
DC power supply	22.5 ms max.

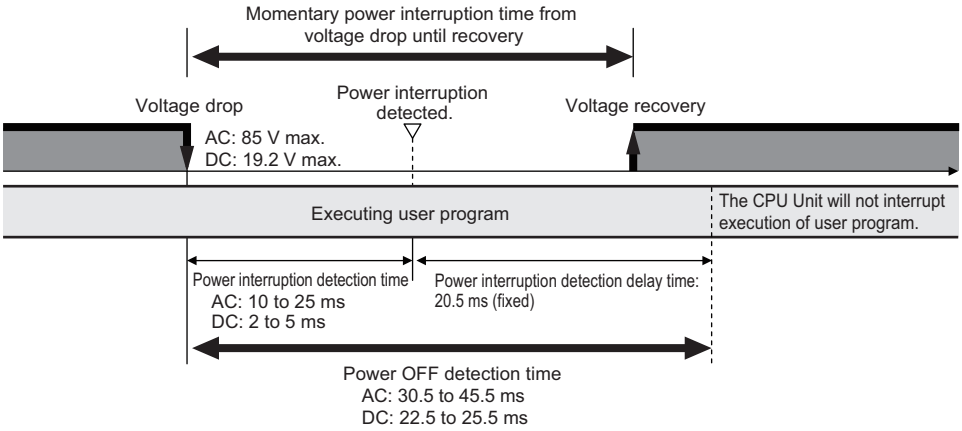

Processing after Power Interruption Is Confirmed

After a power interruption is confirmed, the CPU Unit performs the following processing and then stops.

Item	Description
I/O refresh	Load outputs are turned OFF. Tag data links stop.

Item		Description
Processing	SD Memory Card access in progress	Any writing is interrupted, files are closed, and the Card is unmounted.
	Transferring user program (including online editing)	Interrupted. As a result, an error will occur the next time that the power is turned ON. The Controller will not operate.
	User program execution	User program execution is aborted even during execution of an instruction.
Saving event log		The time that a power interruption occurs and the cause (primary power interruption of Power Supply Unit) of the interruption are recorded.

4-1-3 Resetting the Controller from the Sysmac Studio

You can reset the CPU Unit from the Sysmac Studio.
A reset from the Sysmac Studio performs the same operation as cycling the power supply of the Power Supply Unit.
Resetting is possible, however, only when the CPU Unit is in PROGRAM mode.
Confirm the following status before resetting the CPU Unit.

- Check the status of output loads.
- Make sure that SD Memory Card access is not in progress.

4-2 Fail-safe Circuits

⚠ WARNING

Provide safety measures in external circuits, including the following items, to ensure safety in the system if an abnormality occurs due to malfunction of the CPU Unit, other Units, or slaves or due to other external factors affecting operation. Not doing so may result in serious accidents due to incorrect operation.

- Emergency stop circuits, interlock circuits, limit circuits, and similar safety measures must be provided in external control circuits.
- The Controller outputs may remain ON or OFF due to deposition or burning of the output relays or destruction of the output transistors. As a countermeasure for such problems, external safety measures must be provided to ensure safe operation of the system.
- The CPU Unit will turn OFF all outputs from Basic Output Units in the following cases. The remote I/O slaves will operate according to the settings in the slaves.
  a) If a power supply error occurs.
  b) When an Incorrect Power Supply Unit Connected error occurs.
  c) When a CPU watchdog timer error or CPU reset occurs
  d) When a Controller error in the major fault level occurs.
  e) While the CPU Unit is startup status until RUN mode is entered after the power is turned ON.

  External safety measures must be provided to ensure safe operation of the system in such cases.
- If external power supplies for slaves or other devices are overloaded or short-circuited, the voltage will drop, outputs will turn OFF, and the system may be unable to read inputs. Provide external safety measures in control with monitoring of external power supply voltage as required so that the system operates safely in such a case.
- Unintended outputs may be performed when an error occurs in variable memory or memory for CJ-series Units. As a countermeasure for such problems, external safety measures must be provided to ensure safe operation of the system.
- Provide measures in the communications system and in the user program to ensure safety in the overall system even if errors or malfunctions occur in data link communications or remote I/O communications.
- If a communications interference occurs for remote I/O or if a major fault level error occurs, output status will be determined by the specifications of the external output device.
  Confirm the operating specifications for communications errors and major fault level errors and implement suitable safety measures. Correctly set all of the settings in the slaves and Units.
- You must implement fail-safe circuits to provide sufficient protection in the event that abnormal signals occur as the result of broken signal lines or momentary power interruptions. Not doing so may result in serious accidents due to incorrect operation.

4-2-1 Order of Powering Up the Controller and Controlled System

Outputs from Units, such as DC Output Units, may malfunction momentarily when the power to the Controller is turned ON. This may cause problems in the system if the Controller power supply is turned ON after the controlled system's power supply. To prevent possible malfunctions, add an external circuit that prevents the power supply to the controlled system from going ON before the power supply to the Controller itself.

Precautions for Safe Use

It takes approximately 10 to 20 s to enter RUN mode after the power supply is turned ON. During that time, outputs will be OFF or the values will be according to settings in the Units or slaves. Also, external communications cannot be performed.
Use the RUN output on the Power Supply Unit, for example, to implement fail-safe circuits so that external devices do not operate incorrectly.

Output Unit Failure

It is possible for an output to remain ON due to a malfunction in the internal circuitry of the Output Unit, such as a relay or transistor malfunction. Be sure to add any circuits necessary outside of the Controller to ensure the safety of the system in the event that an output fails to go OFF.

Power Supply Wiring and Emergency Stop Circuit

The following emergency stop circuit controls the power supply to the controlled system so that power is supplied to the controlled system only when the Controller is operating and the RUN output is ON.

An external relay (CR1) is connected to the RUN output from the Power Supply Unit*1 as shown in the following diagram.

*1. A RUN output is provided only on the NJ-PA3001/-PD3001 Power Supply Unit.

● Electrical Diagram

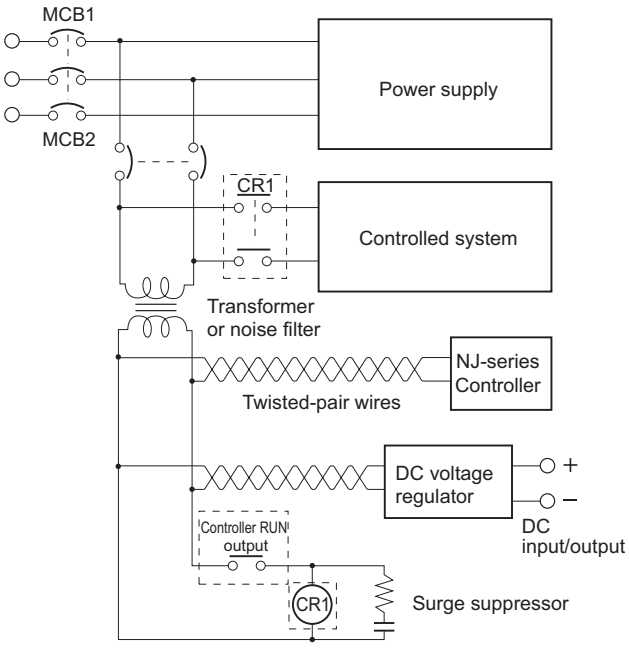

Interlock Circuits

When the Controller controls an operation such as the clockwise and counterclockwise operation of a motor, provide an external interlock such as the one shown in the following example to prevent both the forward and reverse outputs from turning ON at the same time if required by the application.

Examples:

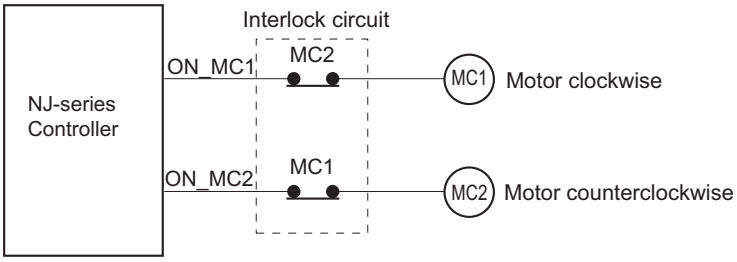

This circuit prevents outputs MC1 and MC2 from both being ON at the same time even if both Controller outputs ON_MC1 and ON_MC2 are ON due to a malfunction.

4-3 Mounting Units

Precautions for Correct Use

- Follow the instructions in this manual to correctly perform installation.
- Do not operate or store the Controller in the following locations. Doing so may cause operation to stop or incorrect operation.
  a) Locations subject to direct sunlight.
  b) Locations subject to temperatures or humidity outside the range specified in the specifications.
  c) Locations subject to condensation as the result of severe changes in temperature.
  d) Locations subject to corrosive or flammable gases.
  e) Locations subject to dirt, dust, salt, and metal powder.
  f) Locations subject to exposure to water, oil, or chemicals.
  g) Locations subject to shock or vibration.
- Take appropriate and sufficient countermeasures when installing systems in the following locations:
  a) Locations subject to strong, high-frequency noise.
  b) Locations subject to static electricity or other forms of noise.
  c) Locations subject to strong electromagnetic fields.
  d) Locations subject to possible exposure to radioactivity.
  e) Locations close to power supplies.

4-3-1 Installation in a Control Panel

Installation in Cabinets or Control Panels

When the Controller is being installed in a cabinet or control panel, be sure to provide proper ambient conditions as well as access for operation and maintenance.

● Temperature Control

The ambient temperature within the enclosure must be within the operating range of 0 to 55°C. When necessary, take the following steps to maintain the proper temperature.

- Provide enough space for good air flow.
- Do not install the Controller directly above equipment that generates a large amount of heat such as heaters, transformers, or high-capacity resistors.
- If the ambient temperature exceeds 55°C, install a cooling fan or air conditioner.

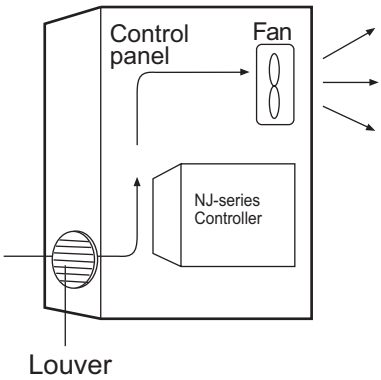

● Accessibility for Operation and Maintenance

- To ensure safe access for operation and maintenance, separate the Controller as much as possible from high-voltage equipment and power machinery.
- It will be easy to operate the Controller if it is mounted at a height of 1,000 to 1,600 mm above the floor.

● Improving Noise Resistance

- Do not mount the Controller in a control panel containing high-voltage equipment.
- Install the Controller at least 200 mm away from power lines.

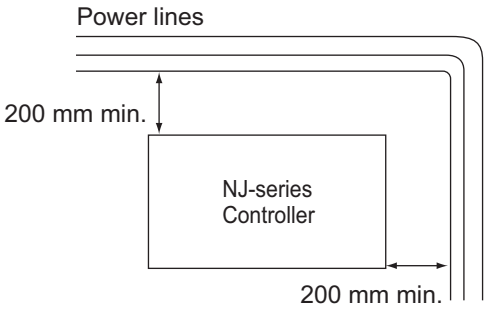

- Ground the mounting plate between the Controller and the mounting surface.
- When I/O Connecting Cables are 10 m or longer, connect the control panels in which Racks are mounted with heavier power wires (3 wires at least 2 mm^2 in cross-sectional area).

● Controller Orientation

- Each Rack must be mounted in an upright position to provide proper cooling.

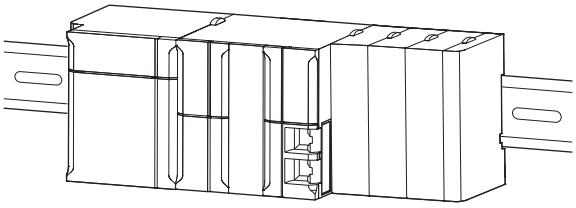

- Do not install a Rack in any of the following positions.

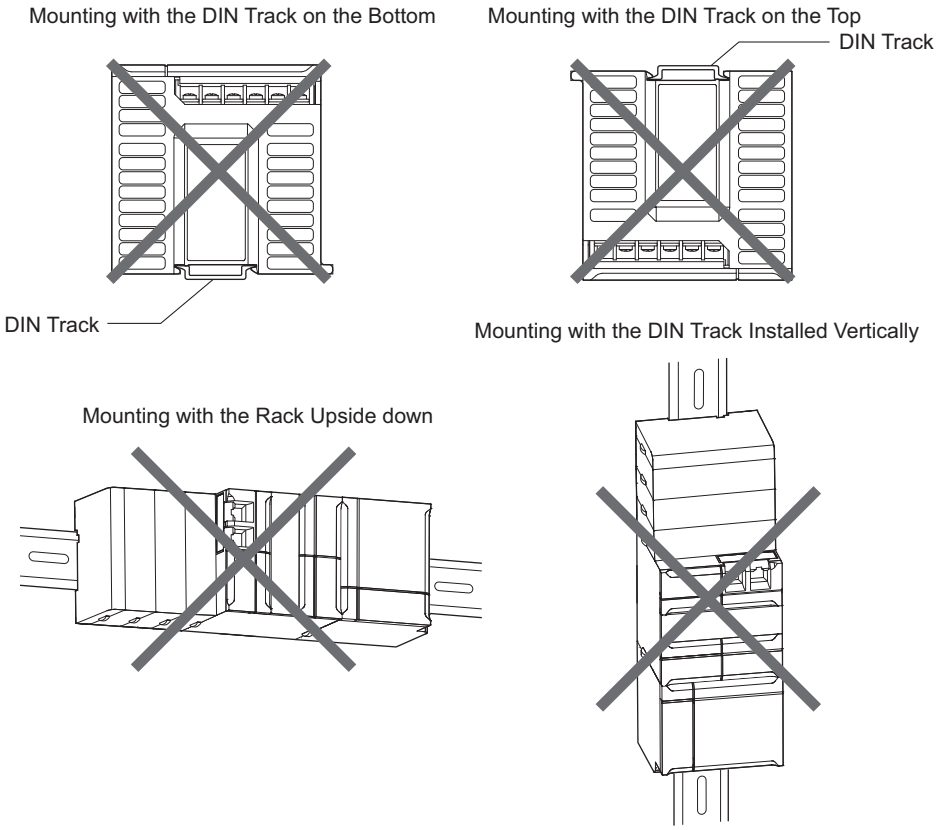

Installation Method in Control Panels

An NJ-series Controller must be mounted inside a control panel on DIN Track. Normally the CPU Rack is installed on top and the Expansion Racks under it.

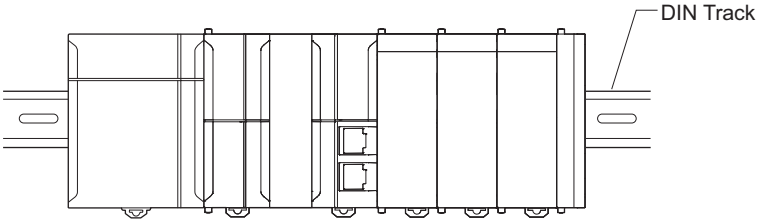

- Consider the width of wiring ducts, wiring, ventilation, and Unit replacement when determining the space between Racks.
- When you install Racks vertically, allow at least 66 mm between any two adjacent Racks.

Additional Information

A Controller must be mounted on DIN Track. It cannot be mounted with screws.

- Wiring Ducts
  Whenever possible, route I/O wiring through wiring ducts or raceways. Install mounting bracket so that it is easy to fish wire from the I/O Units through the duct. It is handy to have the duct at the same height as the Racks.

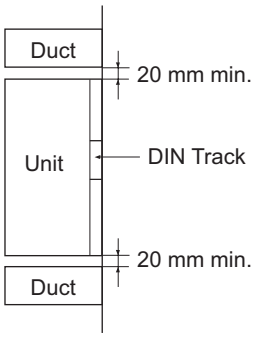

● Wiring Duct Example

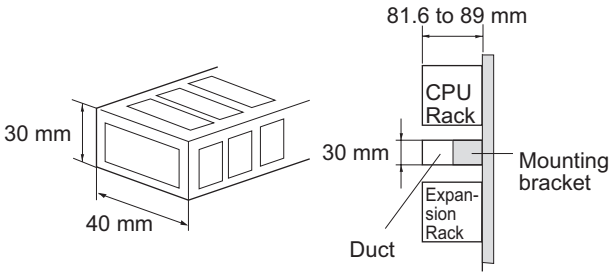

Precautions for Correct Use

Tighten terminal block screws and cable screws to the following torques.
Terminal Screws
M4: 1.2 N·m
M3: 0.5 N·m
Cable Connector Screws
M2.6: 0.2 N·m

● Routing Wiring Ducts

Install the wiring ducts at least 20 mm away from the tops of the Racks and any other objects (e.g., ceiling, wiring ducts, structural supports, devices, etc.) to provide enough space for air circulation and replacement of Units.

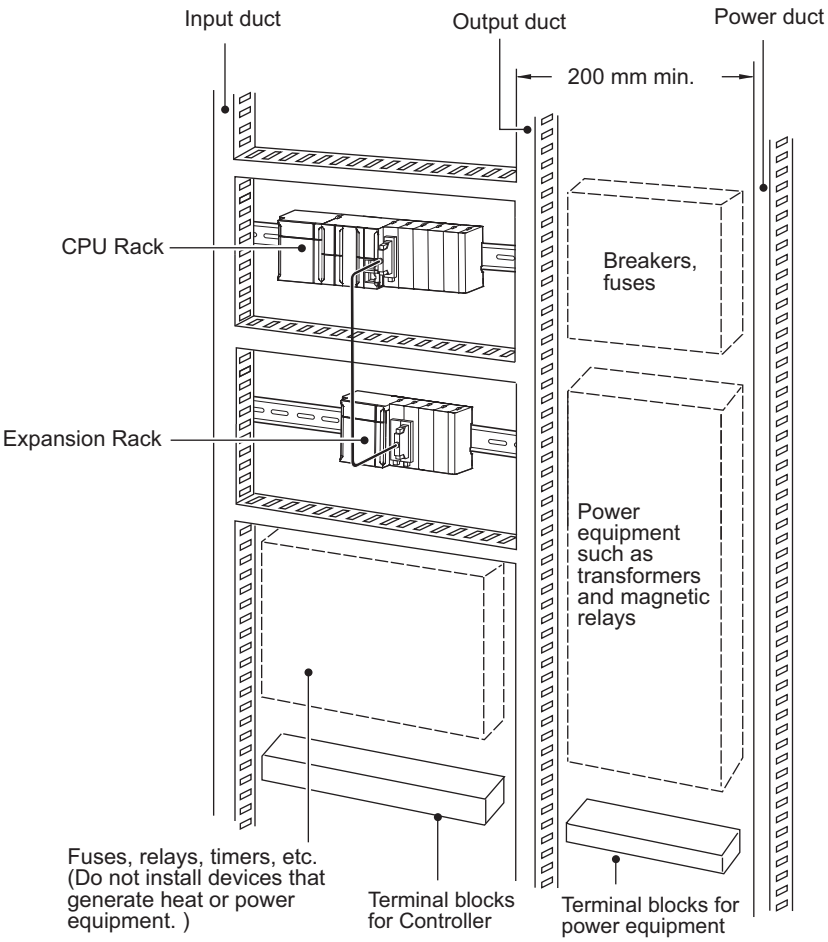

4-3-2 Connecting Controller Components

The Units that make up an NJ-series Controller can be connected simply by pressing the Units together and locking the sliders by moving them toward the back of the Units. The End Cover is connected in the same way to the Unit on the far right side of the Controller.

1 Join the Units so that the connectors fit exactly.

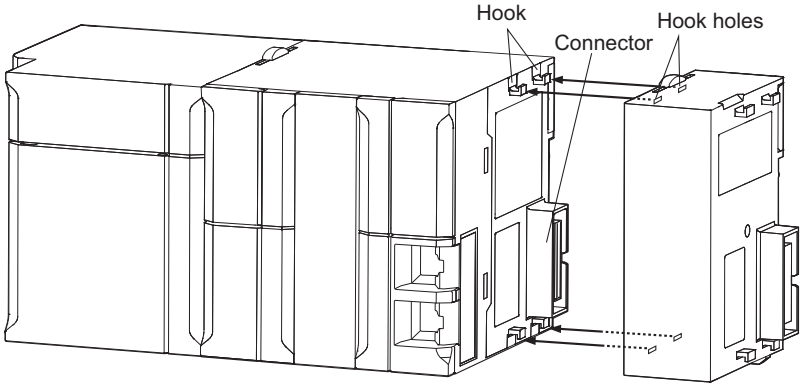

2 The yellow sliders at the top and bottom of each Unit lock the Units together. Move the sliders toward the back of the Units as shown below until they click into place.

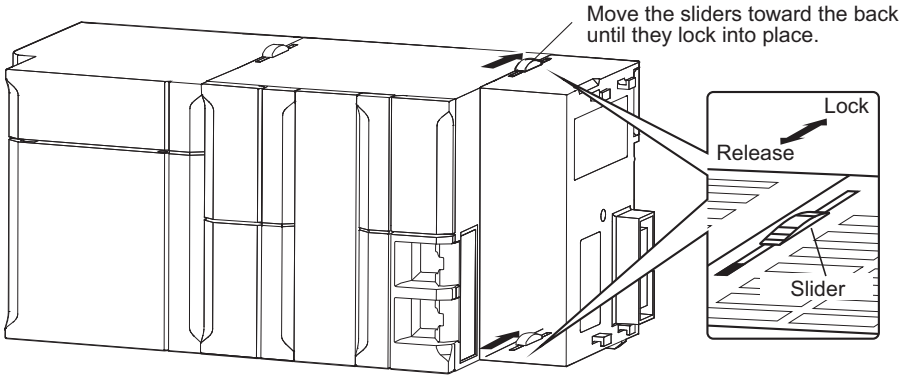

Precautions for Safe Use

The sliders on the tops and bottoms of the Power Supply Unit, CPU Unit, I/O Units, Special I/O Units, and CPU Bus Units must be completely locked (until they click into place) after connecting the adjacent Unit connectors.

3 Attach the End Cover to the Unit on the far right side of the Rack.

CPU Rack

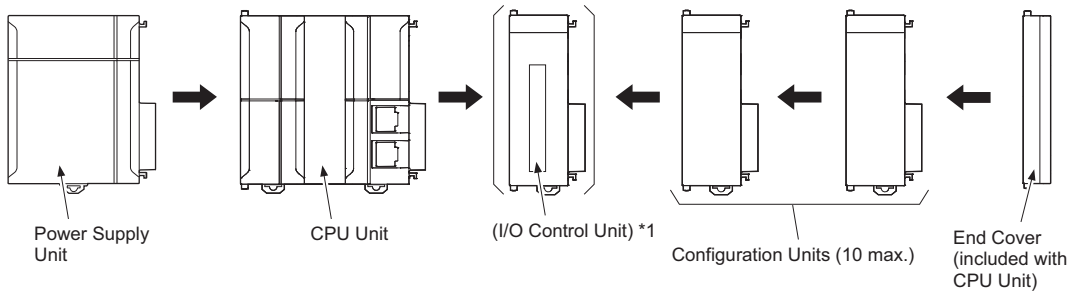

*1: Connect the I/O Control Unit directly to the CPU Unit to enable connecting Expansion Racks.

Expansion Rack

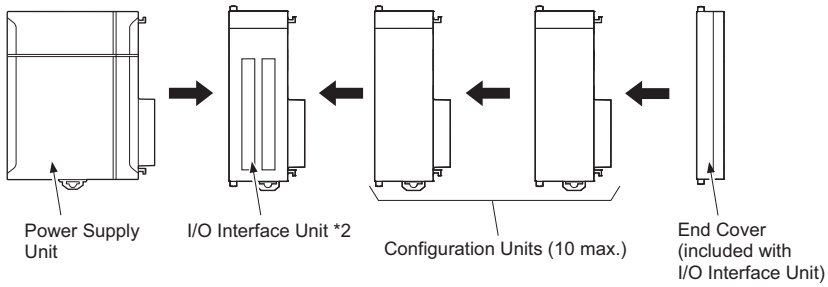

*2: Connect the I/O Interface Unit directly to the Power Supply Unit.

Additional Information

There is no Backplane for the NJ-series. The Controller is constructed by connecting Units together using the connectors on the sides.

Precautions for Correct Use

- Always turn OFF the power supply before connecting Units to each other.
- Always turn OFF the power supply to the entire system before replacing a Unit.
- A maximum of 10 Units can be connected in any one CPU Rack or Expansion Rack. If you connect more than that number, an *Incorrect Unit/Expansion Rack Connection* error (a major fault level Controller error) will occur, and the NJ-series CPU Unit will not operate.

4-3-3 DIN Track Installation

Use the following procedure to install an NJ-series Controller on DIN Track.

1 Release the pins on the backs of the NJ-series Units.

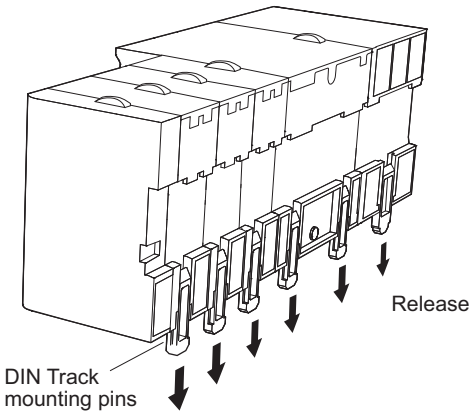

2 Fit the back of the Controller onto the DIN Track by inserting the top of the track and then pressing in at the bottom of the Controller, as shown below.

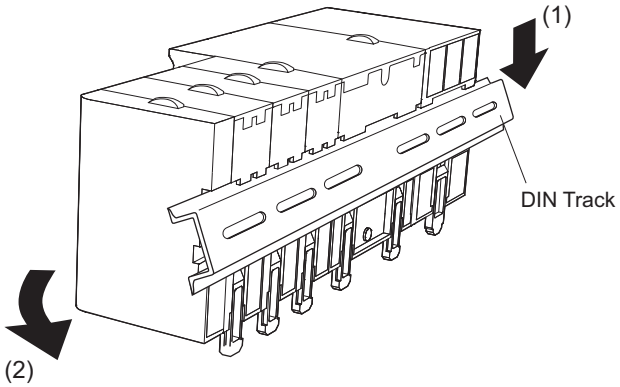

3 Lock the pins.

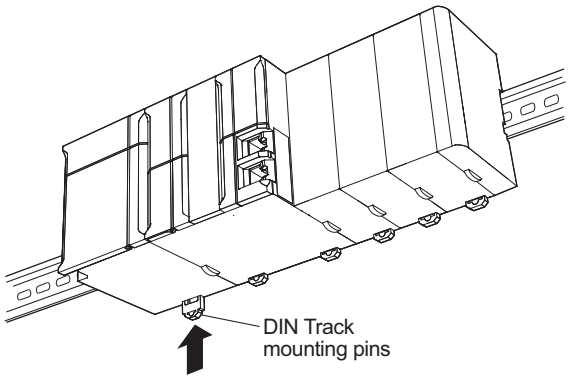

4 Install a DIN Track End Plate on each end of the Controller.
To install an End Plate, hook the bottom on the bottom of the track, rotate the Plate to hook the top of the Plate on the top of the track,

and then tighten the screw to lock the Plate in place.

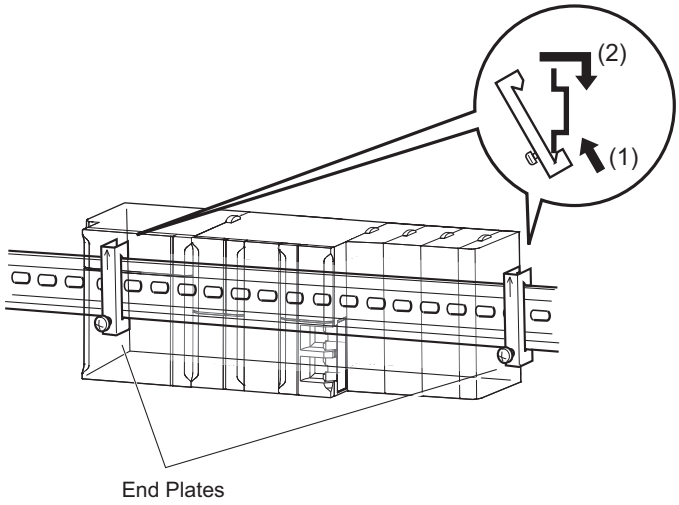

Additional Information

To remove Units, perform the steps above in reverse order.

Precautions for Safe Use

Always turn OFF the power supply to the Controller before attempting any of the following.
- Mounting or removing I/O Units or CPU Units
- Assembling the Units.
- Setting DIP switches or rotary switches.
- Connecting cables or wiring the system.
- Connecting or disconnecting the connectors.

The Power Supply Unit continues to supply power to the Controller for up to several seconds after the power supply is turned OFF. The PWR indicator remains lit as long as power is supplied. Make sure that the PWR indicator is not lit before you perform any of the above operations.

DIN Track and Accessories

Use the DIN Track and DIN Track End Plates shown below.
Secure each DIN Track inside a control panel with at least three screws.

- DIN Track Model numbers: PFP-50N (50 cm), PFP-100N (100 cm), PFP-100N2 (100 cm)

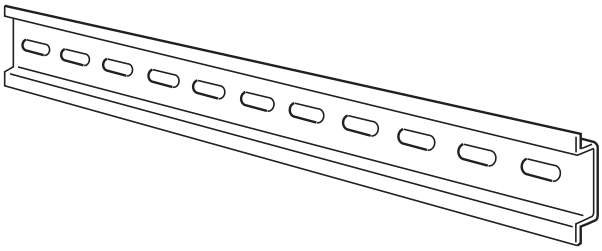

Secure the DIN Track to the control panel using M4 screws separated by 210 mm (6 holes) or less and using at least 3 screws. The tightening torque is 1.2 N·m.

PFP-100N2 DIN Track

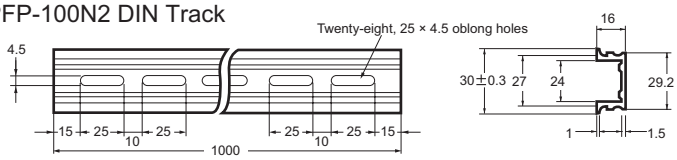

PFP-100N/50N DIN Track

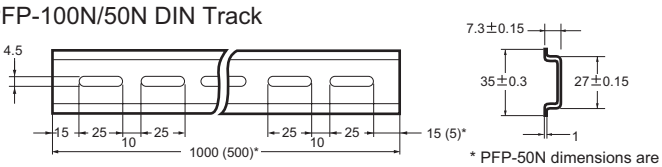

* PFP-50N dimensions are given in parentheses.

- PFP-M DIN Track End Plates (2 required)

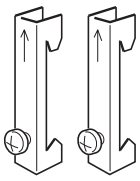

4-3-4 Connecting CJ-series Expansion Racks

CS/CJ-series I/O Connecting Cables are used to connect the NJ-series CPU Rack and CJ-series Expansion Racks.

● CS/CJ-series I/O Connecting Cables

- These connectors are equipped with easy-lock connectors.
- Use them to connect the CPU Rack to an Expansion Rack or to connect two Expansion Racks.

Model number	Cable length
CS1W-CN313	0.3 m
CS1W-CN713	0.7 m
CS1W-CN223	2 m
CS1W-CN323	3 m
CS1W-CN523	5 m
CS1W-CN133	10 m
CS1W-CN133-B2	12 m

- The CS/CJ-series I/O Connecting Cables are used to connect the I/O Control Unit on the NJ-series CPU Rack to the I/O Interface Unit on a CJ-series Expansion Rack or to connect the I/O Interface Units on two CJ-series Expansion Racks.
- Install the Racks and select I/O Connecting Cables so that the total length of all I/O Connecting Cables does not exceed 12 m.
- The following diagram shows where each I/O Connecting Cable must be connected on each Rack.
  The Rack will not operate if the cables aren't connected properly.

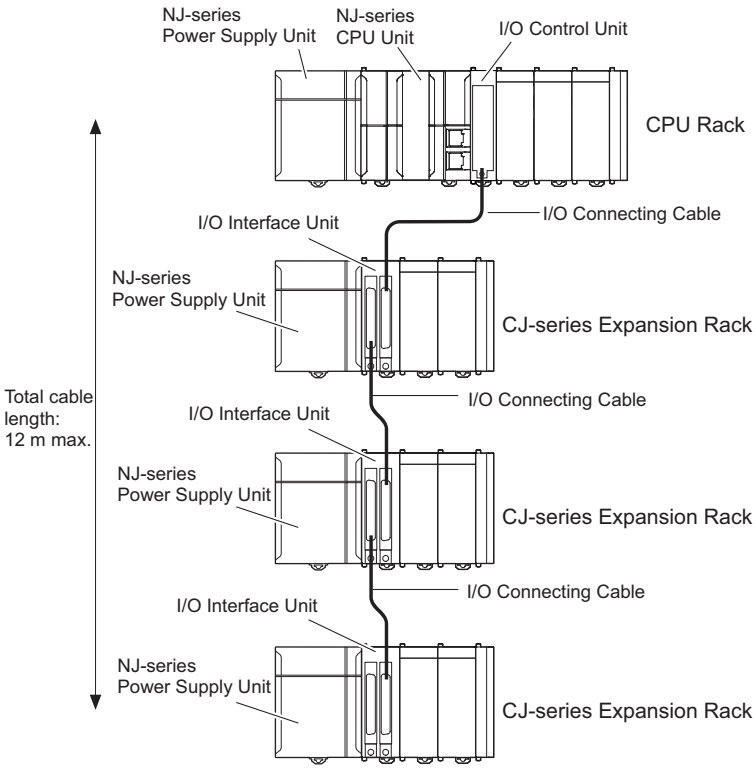

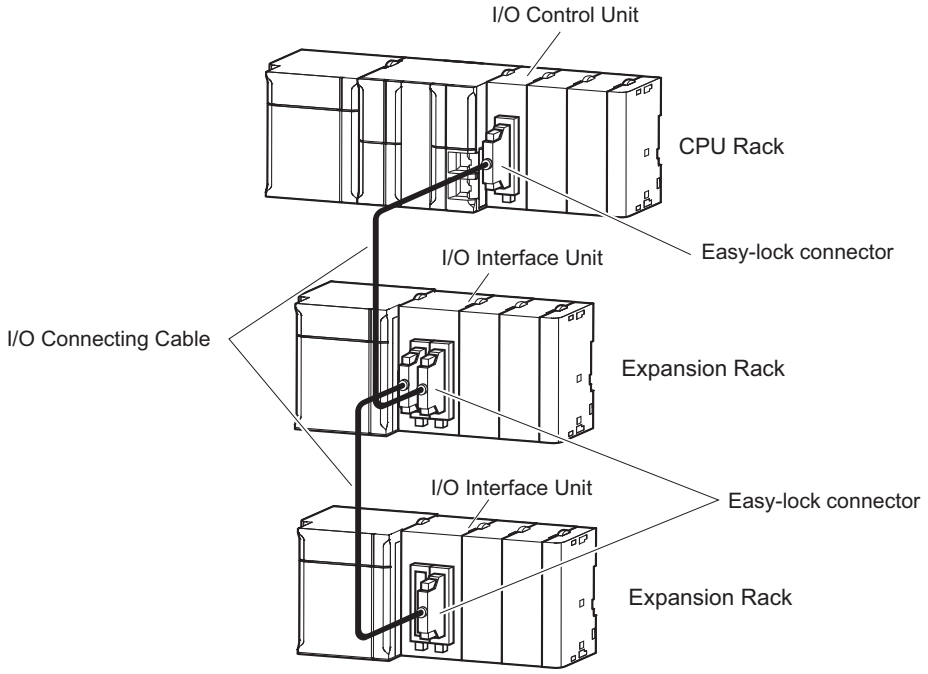

- The top and bottom of the connector are different. Be sure the connector is facing the correct direction before connecting it.

● Connecting the Easy-lock Connectors

Insert the connector until it locks in place. The Controller will not operate properly if the connector is not inserted completely.
To remove the connector, press the tabs and pull on the connector.

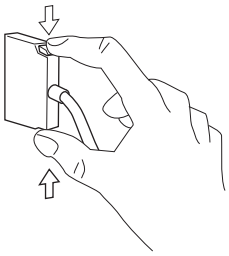

Precautions for Correct Use

- When using an I/O Connecting Cable with a locking connector, be sure that the connector is firmly locked in place before using it.
- Always turn OFF the power supply to the Controller before connecting a cable.
- An I/O bus check error will occur and the Controller will stop if an I/O Connecting Cable's connector is disconnected from the Rack. Be sure that the connectors are secure.
- A 63-mm hole will be required if the I/O Connecting Cable must pass through a hole when connecting an Expansion Rack.
- Do not bend the I/O Connecting cable past its natural bending radius or pull in it with excessive force.
- The cables can withstand a pulling force up to 49 N (11 lbs).
- The minimum bending radius is shown in the following diagram.

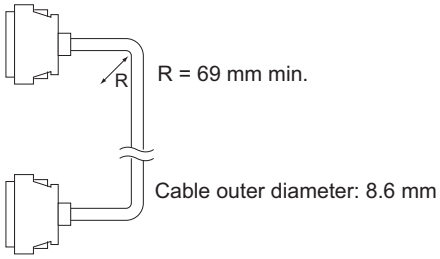

- Always attach the cover to the output connector (left side) on the last I/O Interface Unit on the last Expansion Rack to protect it from dust.

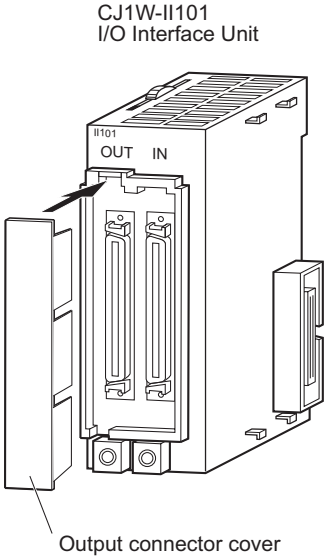

4-3-5 Assembled Appearance and Dimensions

The NJ-series Units, including the Power Supply Unit, the CPU Unit, and I/O Units, are connected to each other. An End Cover is connected to the right end.

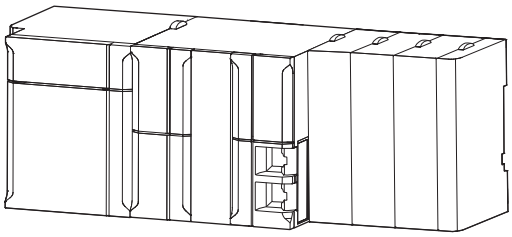

Dimensions

Power Supply Unit

Model	Unit width (mm)
NJ-PA3001	70
NJ-PD3001	

CPU Unit

Model	Unit width (mm)
NJ501-1500	90
NJ501-1400	
NJ501-1300	
NJ501-R500	
NJ501-R400	
NJ501-R300	
NJ501-4500	
NJ501-4400	
NJ501-4300	
NJ501-4310	
NJ501-1520	
NJ501-1420	
NJ501-1320	
NJ501-4320	
NJ501-1340	
NJ301-1200	
NJ301-1100	
NJ101-1000	
NJ101-9000	
NJ101-1020	
NJ101-9020	

End Cover

Model	Unit width (mm)
CJ1W-TER01	14.7

Other Units come into two widths: 20 mm and 31 mm.

20-mm-wide Units

Name	Model	Unit width (mm)
I/O Control Unit	CJ1W-IC101	20
32-point Basic I/O Units	CJ1W-ID231/232/233	
	CJ1W-OD231/232/233/234	
B7A Interface Units	CJ1W-B7A22 CJ1W-B7A14 CJ1W-B7A04	

31-mm-wide Units

Name	Model	Unit width (mm)
I/O Interface Unit	CJ1W-II101	31
8-point and 16-point Basic I/O Units	CJ1W-ID201 CJ1W-ID211/212 CJ1W-IA111/201 CJ1W-OD20□ CJ1W-OD211/212/213 CJ1W-OC201/211 CJ1W-OA201/201-1	
32-point Basic I/O Units	CJ1W-MD231/232/233	
64-point Basic I/O Units	CJ1W-ID261 CJ1W-OD261 CJ1W-MD261	
	CJ1W-ID262 CJ1W-OD262/263 CJ1W-MD263/563	
Interrupt Input Unit	CJ1W-INT01	
Quick-response Input Unit	CJ1W-IDP01	
Analog I/O Units	CJ1W-AD□□□-V1 CJ1W-AD042 CJ1W-DA□□□ CJ1W-DA042V CJ1W-MAD42	
Process I/O Units	CJ1W-AD04U CJ1W-PH41U CJ1W-PDC15	
Temperature Control Units	CJ1W-TC□□3/□□4	
High-speed Counter Unit	CJ1W-CT021	
ID Sensor Units	CJ1W-V680C11 CJ1W-V680C12	
Serial Communications Units	CJ1W-SCU22/32/42	
EtherNet/IP Unit	CJ1W-EIP21 CJ1W-EIP21S	
DeviceNet Unit	CJ1W-DRM21	
CompoNet Master Unit	CJ1W-CRM21	
EtherCAT Slave Unit	CJ1W-ECT21	

● Design Example for Width W

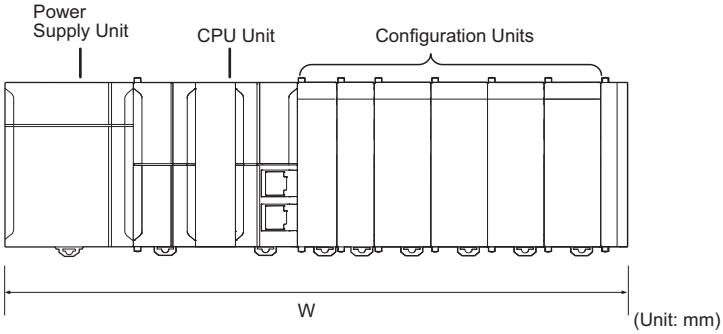

Power Supply Unit: NJ-PA3001 (70 mm)
CPU Unit: NJ501-1500 (90 mm)
Basic I/O Units: CJ1W-ID231 (20 mm) × 2
Special I/O Units: CJ1W-AD081-V1 (31 mm) × 4
CPU Bus Unit: CJ1W-EIP21 (31 mm) × 1

W = 70 + 90 + 20 x 2 + 31 × 4 + 31 × 1 + 14.7 (End Cover) = 369.7 mm

Refer to *Rack Current Consumption and Width Display* on page 3-19 for the procedure to check the width of each Rack from the Sysmac Studio.

Installation Dimensions

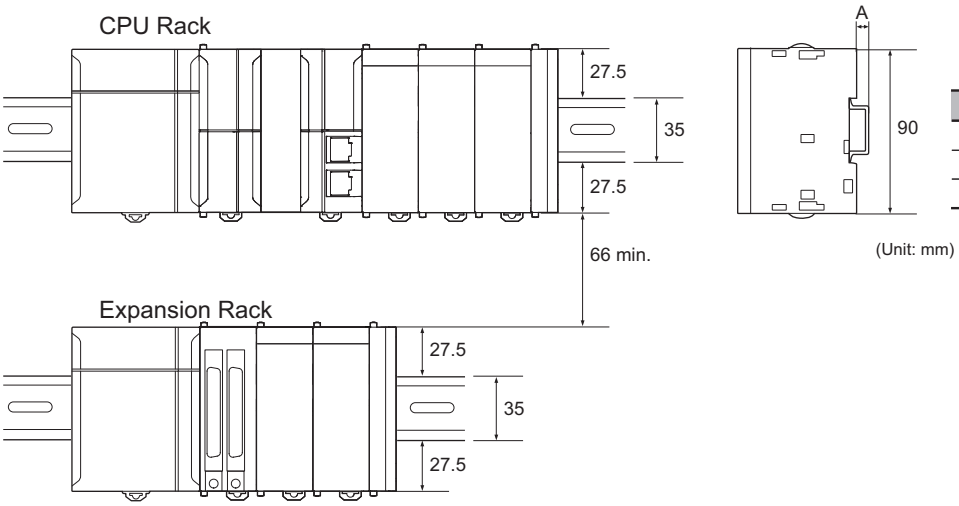

DIN Track	A
PFP-100N2	16 mm
PFP-100N	7.3 mm
PFP-50N	7.3 mm

Installation Height

With a height of 90.0 mm, the CPU Unit is the highest component in an NJ-series CPU Rack. It is also higher than any Units on an Expansion Rack. When a cable is connected (such as a connecting cable to Support Software), however, even greater height is required. Allow sufficient depth in the control panel containing the Controller.

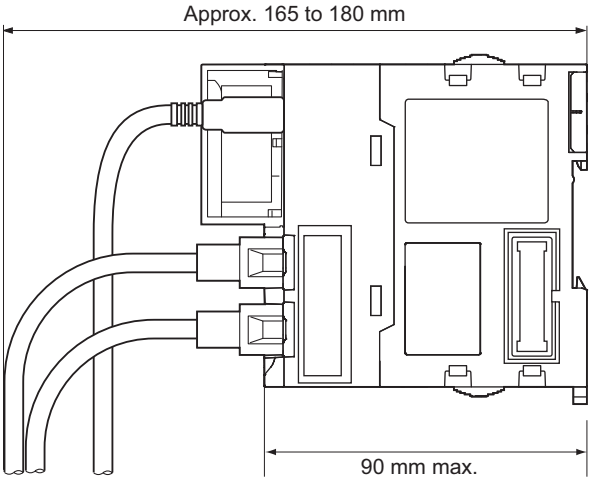

4-4 Wiring

⚠ WARNING

- Do not input a voltage or current that exceeds the specified range into a Unit or slave. If a voltage or current that is outside the specified range is input, the Unit or slave may fail or a fire may occur.

⚠ CAUTION

- Tighten terminal block screws and cable screws to the torques specified in this manual or in the reference manuals. Loose screws can cause fire or malfunction.
- Do not touch devices while power is supplied or immediately after the power supply is turned OFF. You may be burnt.

4-4-1 Power Supply Wiring

AC Power Supply Units

● NJ-PA3001 Power Supply Unit

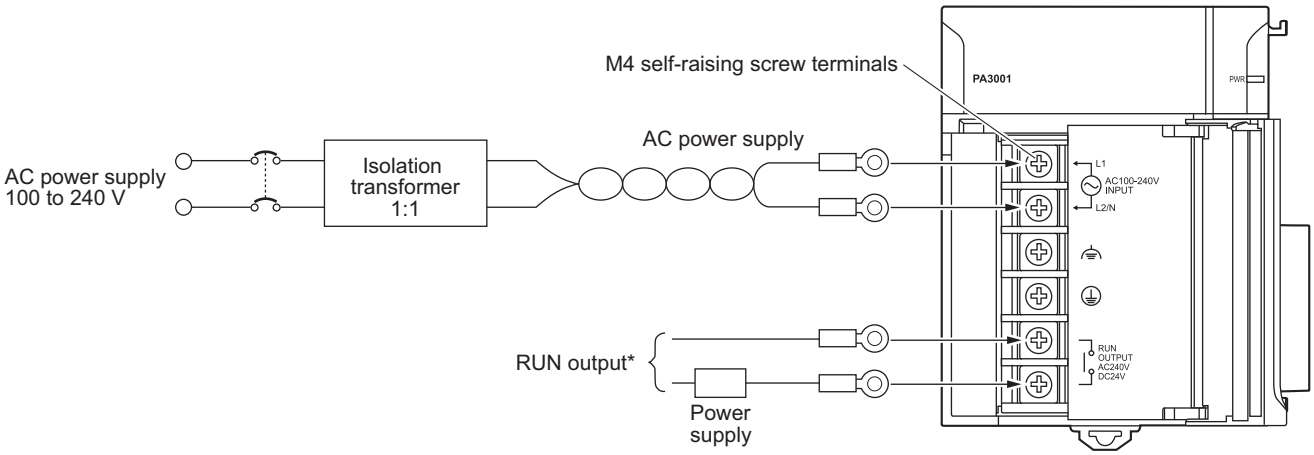

* The RUN output is ON when the CPU Unit is in RUN mode and OFF when the CPU Unit is in PROGRAM mode or a Controller error in the major fault level occurs.

Additional Information

The RUN output function is enabled only when mounted to a CPU Rack.

● AC Power Source

- Supply 100 to 240 VAC.
- Keep voltage fluctuations within the specified range:

Supply voltage	Allowable voltage fluctuations
100 to 240 VAC	85 to 264 VAC

- If one power supply phase of the equipment is grounded, connect the grounded phase side to the L2/N terminal.

Isolation Transformer

The Controller's internal noise isolation circuits are sufficient to control typical noise in power supply lines. Noise between the Controller and ground can be significantly reduced by connecting a 1- to-1 isolation transformer. Do not ground the secondary coil of the transformer.

Power Supply Capacity

The power consumption will be 120 VA maximum. per Rack for the NJ-PA3001. When you select the power supply, consider that surge current will flow when the power is turned ON.
Refer to *3-3-1 Models and Specifications* on page 3-14 for information on surge current specifications.

RUN Output

This output is ON when the CPU Unit is operating;
It is OFF when the CPU Unit is in PROGRAM mode or a Controller error in the major fault level occurs.
The RUN output can be used to control external systems, such as in an emergency stop circuit that turns OFF the power supply to external systems when the CPU Unit is not operating. (*4-2 Fail-safe Circuits* on page 4-7)

	NJ-PA3001
Contact form	SPST-NO
Maximum switching capacity	240 VAC: 2 A for resistive loads
	120 VAC: 0.5 A for inductive loads
	24 VDC: 2 A for resistive loads

Crimp Terminals

The terminals on the Power Supply Unit are M4, self-raising terminals with screws.

Precautions for Safe Use

- Use crimp terminals for wiring.
- Do not connect bare stranded wires directly to terminals.
- Tighten the terminal block screws to a torque of 1.2 N·m.
- Use crimp terminals (M4) having the dimensions shown below.
  Crimp Terminals for AC Power Supplies

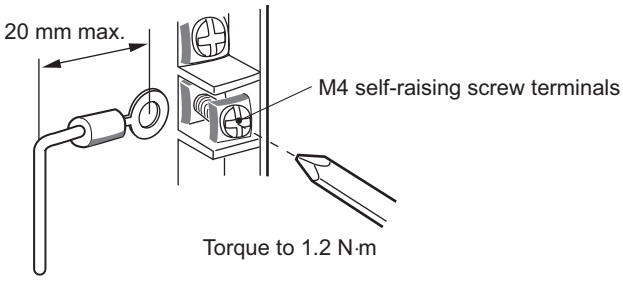

- Always remove any dustproof labels that are on the top of the Units when they are shipped before you turn ON the power supply. If the labels are not removed, heat will accumulate and malfunctions may occur.

Precautions for Correct Use

Do not allow wire clippings, shavings, or other foreign material to enter any Unit. Otherwise, Unit burning, failure, or malfunction may occur. Cover the Units or take other suitable counter-measures, especially during wiring work.

DC Power Supplies

● NJ-PD3001 Power Supply Unit

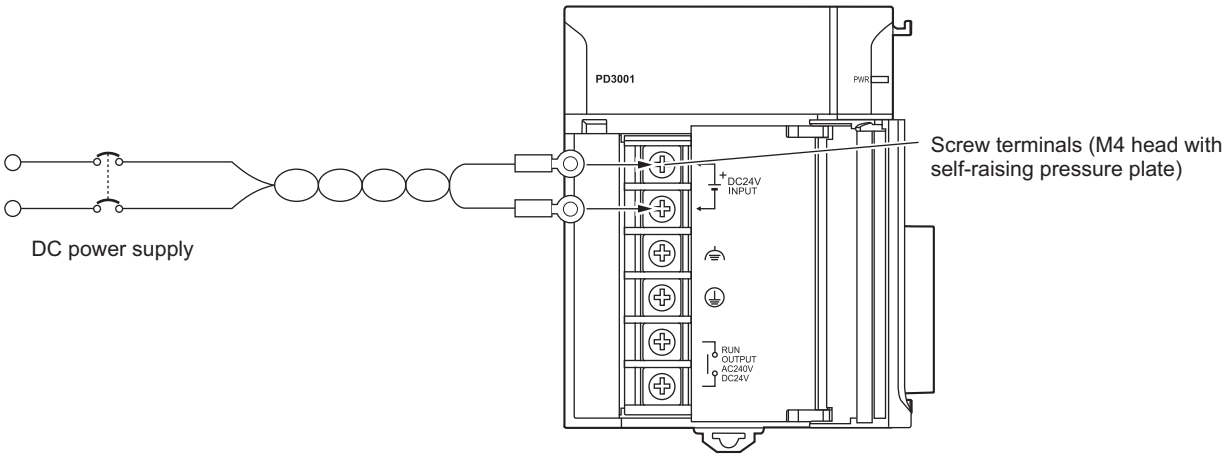

● DC Power Source

Supply 24 VDC. Keep voltage fluctuations within the specified range.

Model	Allowable voltage fluctuation range
NJ-PD3001	19.2 to 28.8 VDC (24 VDC ± 20%)

● Power Supply Capacity

The maximum power consumption is 60 W (NJ-PD3001) per Rack. When you select the power supply, consider that surge current will flow when the power is turned ON.
Refer to *3-3-1 Models and Specifications* on page 3-14 for information on surge current specifications.

● RUN Output

This output is ON when the CPU Unit is operating;
it is OFF when the CPU Unit is in PROGRAM mode or a Controller error in the major fault level occurs.
The RUN output can be used to control external systems, such as in an emergency stop circuit that turns OFF the power supply to external systems when the CPU Unit is not operating. (*4-2 Fail-safe Circuits* on page 4-7)

	NJ-PD3001
Contact form	SPST-NO
Maximum switching capacity	240 VAC: 2 A for resistive loads
	120 VAC: 0.5 A for inductive loads
	24 VDC: 2 A for resistive loads

● Crimp Terminals

The terminals on the Power Supply Unit are M4, self-raising terminals with screws.

Precautions for Safe Use

- Use crimp terminals for wiring.
- Do not connect bare stranded wires directly to terminals.
- Tighten the terminal block screws to the torque of 1.2 N·m.
- Use crimp terminals (M4) having the dimensions shown below.

Crimp Terminals for DC Power Supplies

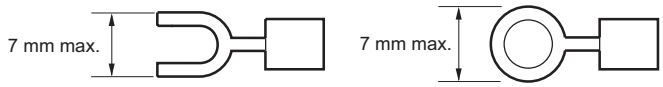

- Always remove any dustproof labels that are on the top of the Units when they are shipped before you turn ON the power supply. If the labels are not removed, heat will accumulate and malfunctions may occur.

Precautions for Correct Use

Do not allow wire clippings, shavings, or other foreign material to enter any Unit. Otherwise, Unit burning, failure, or malfunction may occur. Cover the Units or take other suitable countermeasures, especially during wiring work.

Grounding

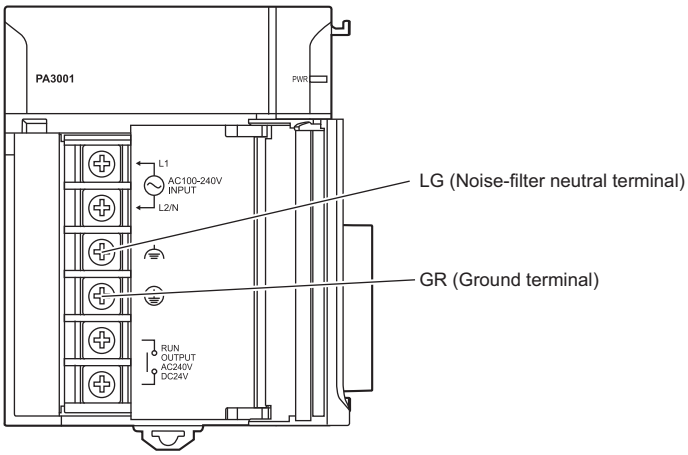

Terminal name	Grounding type	Symbol	Function
LG	Functional Grounding		Functional grounding is done to protect device and system functions, including prevention of noise from external sources, or prevention of noise from devices or equipment that could have harmful effects on other devices or equipment.
GR	Protective Grounding		Protective grounding is done to ensure safety. It is intended to prevent electrical shock by grounding the electrical potential that is generated by factors such as leakage, induction, or failure.

- GR terminal is a ground terminal to prevent electrical shock. Always ground the terminal.
- LG terminal is a noise-filtered neutral terminal to increase noise resistance, and it is effective in suppressing power supply common noise. The internal circuit is shown in the following figure. Ground the LG terminal alone or connect the LG terminal with the GR terminal.

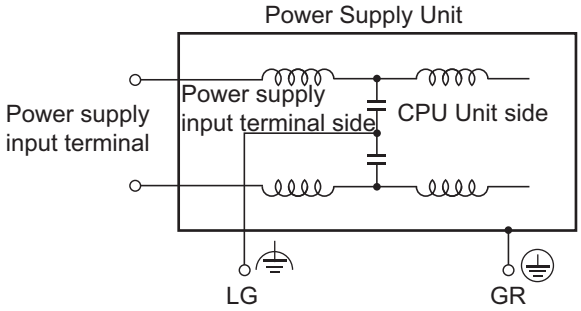

- When you ground the LG terminal or connect the LG terminal with the GR terminal, it may cause to enter noise into devices or equipments. In this case, do not ground the LG terminal or connect the LG terminal with the GR terminal.
- Ground the GR and LD terminals with a ground resistance of less than 100 Ω using a 14-gauge wire (minimum cross-sectional area of 2 mm^2).
- The ground wire should not be more than 20 m long.
- The NJ-/CJ-series Controllers are designed to be mounted so that they are isolated (separated) from the mounting surface to protect them from the effects of noise in the installation environment (e.g., the control panel).

- Do not share the Controller's ground with other equipment or ground the Controller to the metal structure of a building. Doing so may worsen operation. Whenever possible, use an independent ground (with the ground pole separated by a minimum of 10 m from any other ground pole).
- Ground to 100 Ω or less, and if possible use a separate ground from those of other devices. (Refer to figure (a) in the diagram below.)
- If using an independent ground is not possible, then use a common ground as shown in figure (b). Connect to the ground pole of the other device.

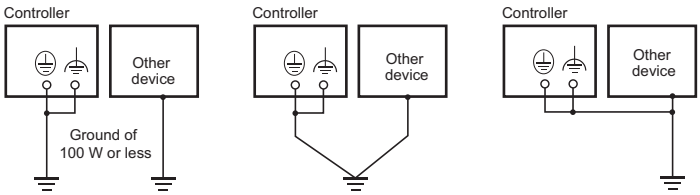

(a) Independent grounds: Best **(b) Common ground: Acceptable** **(c) Common ground: Incorrect**

Grounding Methods

- Refer to *4-5-6 Grounding* on page 4-60 for details on the grounding of the control panel.

Precautions for Safe Use

If the LG and GR terminals are connected, make sure to connect them firmly. The LG terminal that is a noise-filtered neutral terminal, has a half electrical potential of the input voltage. Therefore, if you touch the metallic part of the LG terminal, GR terminal, or Controller, while the GR terminal is not grounded, it may result in electrical shock.

● Crimp Terminals

The terminals on the Power Supply Unit are M4, self-raising terminals with screws.

Precautions for Safe Use

- Use crimp terminals for wiring.
- Do not connect bare stranded wires directly to terminals.
- Tighten the terminal block screws to the torque of 1.2 N·m.
- Use crimp terminals (M4) having the dimensions shown below.

● Crimp Terminals for DC Power Supply

● When wiring an AC Power Supply Unit, if one power supply phase of the equipment is grounded, always connect the grounded phase to the L2/N terminal.

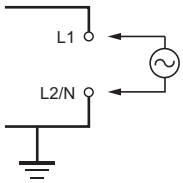

4-4-2 Wiring the Built-in EtherCAT Port

For information on wiring the built-in EtherCAT port, refer to the *NJ/NX-series CPU Unit Built-in EtherCAT Port User's Manual (Cat. No. W505)*.

4-4-3 Wiring CJ-series Basic I/O Units with Terminal Blocks

Precautions for Wiring I/O Units

● I/O Unit Specifications

Double-check the specifications for the I/O Units.

Be particularly careful of the following to prevent failure, damage, and fires.

- Make sure that voltages of the external power supplies are within the ratings of the I/O Units.
- Make sure that load currents are within the ratings of the Output Units.
- Make sure that power supply terminals with polarity are connected correctly.

● Electric Wires

- The following wire gauges are recommended.

Terminal Block Connector	Wire Size
18-terminal	AWG 22 to 18 (0.32 to 0.82 mm^2)

- The current capacity of electric wire depends on factors such as the ambient temperature and insulation thickness as well as the gauge of the conductor.

● Crimp Terminals

The terminals on the I/O Unit are M3, self-raising terminals with screws.

Precautions for Safe Use

- Use crimp terminals for wiring.
- Do not connect bare stranded wires directly to terminals.
- Tighten the terminal block screws to the torque of 0.5 N·m.
- Use crimp terminals (M3) having the dimensions shown below.

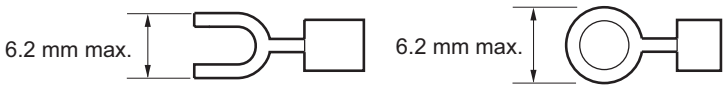

● Wiring

- Make sure that all Units are connected properly.
- Do not allow wire clippings, shavings, or other foreign material to enter any Unit during wiring.
- To allow heat to dissipate, always remove any dustproof labels that are on the top of the Units before you turn ON the power supply.

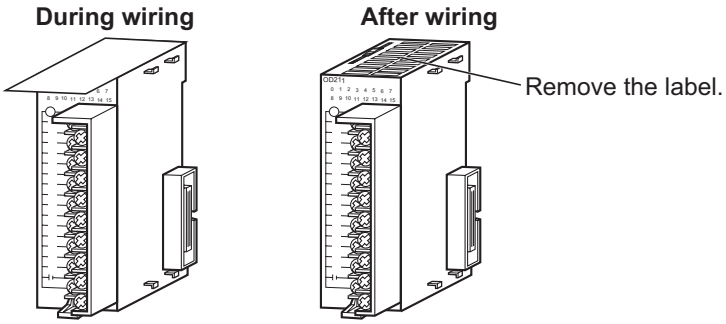

- Wire the Units so that they can be easily replaced.
- Make sure that the I/O indicators are not covered by the wiring.
- Do not place the wiring for I/O Units in the same duct or raceway as power lines. Inductive noise can cause errors in operation.
- Tighten the terminal screws to the torque of 0.5 N·m.

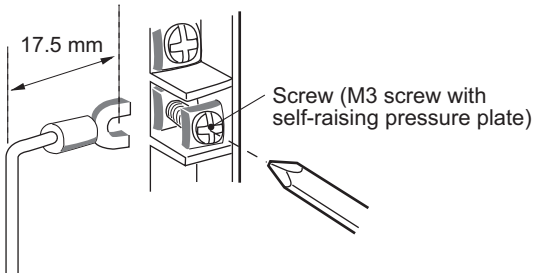

● Terminal Blocks

- The I/O Units are equipped with removable terminal blocks. The lead wires do not have to be removed from the terminal block to remove it from an I/O Unit.
- After you complete wiring, check to see if the terminal block is securely locked.

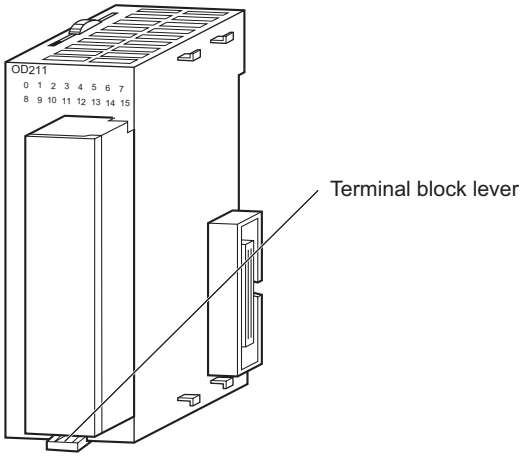

CJ-series Basic I/O Unit

4-4-4 Wiring CJ-series Basic I/O Units with Connectors

This section describes wiring for CJ-series Basic I/O Units with connectors (32- and 64-point Units).

Depending on the connector, the following methods are used to connect these Units to external I/O devices.

- Use an OMRON Connecting Cable (equipped with a special connector) to connect to a Terminal Block or Relay Terminal.
- Use a special connector and make your own cable.

Precautions for Safe Use

- Do not apply voltages that exceeds the input voltages for Input Units or the maximum ratings of Output Units.
- When the power supply has positive and negative terminals, be sure to wire them correctly.
- Use the power supply in SELV specifications for the DC power supplies connected to DC I/O Units when required by EU Directives (low voltage).
- When connecting the connector to the I/O Unit, tighten the connector screws to a torque of 0.2 N·m.
- Turn ON the power after checking the connector's wiring.
- Do not pull the cable. Doing so will damage the cable.
- Bending the cable too sharply can damage or break wiring in the cable.

Additional Information

CJ-series Basic I/O Units with 32 or 64 points and Fujitsu / OTAX connectors have the same connector pin allocations as the C200H High-density I/O Units and CS-series I/O Units with connectors to make them compatible.

Connecting to a Connector-Terminal Block Conversion Unit or I/O Relay Terminal

For details on using OMRON Connecting Cables equipped with special connectors to connect Basic I/O Units with connectors to OMRON Connector-Terminal Block Conversion Units or I/O Relay Terminals, refer to *A-2-4 Connecting Connector-Terminal Block Conversion Units and I/O Relay Terminals* on page A-74.

Using User-made Cables with Connector

Available Connectors

Use the following connectors when assembling a connector and cable.

CJ-series 32- and 64-point Basic I/O Units with Fujitsu / OTAX Connectors

Applicable Units

Model	Specifications	Pins
CJ1W-ID231	Input Unit, 24 VDC, 32 inputs	40
CJ1W-ID261	Input Unit, 24 VDC, 64 inputs	
CJ1W-OD231	Transistor Output Unit with Sinking Outputs, 32 outputs	
CJ1W-OD261	Transistor Output Unit with Sinking Outputs, 64 outputs	
CJ1W-MD261	24-VDC Input/Transistor Output Units, 32 Inputs, 32 Outputs	
CJ1W-MD231	24-VDC Input/Transistor Output Units, 16 Inputs, 16 Outputs	24

Applicable Cable-side Connectors

Connection	Pins	OMRON set	Fujitsu / OTAX parts	
Solder-type	40	C500-CE404	Socket:	Fujitsu FCN-361J040-AU
			Connector cover:	Fujitsu FCN-360C040-J2
				OTAX N360C040J2
	24	C500-CE241	Socket:	Fujitsu FCN-361J024-AU
			Connector cover 2:	Fujitsu FCN-360C024-J
				OTAX N360C024J2
Crimped	40	C500-CE405	Socket:	Fujitsu FCN-363J040
				OTAX N363J040
			Connector cover:	Fujitsu FCN-360C040-J2
				OTAX N360C040J2
			Contacts:	Fujitsu FCN-363J-AU
				OTAX N363JAU
	24	C500-CE242	Socket:	Fujitsu FCN-363J024
				OTAX N363J024
			Connector cover:	Fujitsu FCN-360C024-J2
				OTAX N360C024J2
			Contacts:	Fujitsu FCN-363J-AU
				OTAX N363JAU
Pressure-welded	40	C500-CE403	Fujitsu FCN-367J040-AU/F	
	24	C500-CE243	Fujitsu FCN-367J024-AU/F OTAX N367J024AUF	

CJ-series 32- and 64-point Basic I/O Units with MIL Connectors
Applicable Units

Model	Specifications	Pins
CJ1W-ID232	Input Unit, 24 VDC, 32 inputs	40
CJ1W-ID233		
CJ1W-ID262	Input Unit, 24 VDC, 64 inputs	
CJ1W-OD232	Transistor Output Unit with sourcing outputs, 32 outputs	
CJ1W-OD262	Transistor Output Unit with sourcing outputs, 64 outputs	
CJ1W-OD233	Transistor Output Unit with sinking outputs, 32 outputs	
CJ1W-OD234		
CJ1W-OD263	Transistor Output Unit with sinking outputs, 64 outputs	
CJ1W-MD263	24-VDC Input/Transistor Output Units, 32 inputs, 32 outputs	
CJ1W-MD563	TTL Input/TTL Output Units, 32 inputs, 32 outputs	
CJ1W-MD232	24-VDC Input/Transistor Output Units, 16 inputs, 16 outputs	20
CJ1W-MD233	24-VDC Input/Transistor Output Units, 16 inputs, 16 outputs	

Applicable Cable-side Connectors

Connection	Pins	OMRON set	DDK parts
Pressure-welded	40	XG4M-4030-T	FRC5-A040-3TOS
	20	XG4M-2030-T	FRC5-A020-3TOS

● Wire Size

We recommend using cable with wire gauges of AWG 24 or AWG 28 (0.2 mm^2 to 0.08 mm^2). Use cable with external wire diameters of 1.61 mm max.

● Wiring Procedure

The following wiring procedure is an example for Fujitsu / OTAX connectors.

1 Check that each Unit is installed securely.

Precautions for Correct Use

Do not force the cables.

2 Cover the Unit while wiring to prevent wire clippings from entering the Unit. If there is a dust-proof label on the top of the Unit, do not remote it before you wire the Unit.
(Remove the label or other covering after wiring has been completed to allow air circulation needed for cooling.)

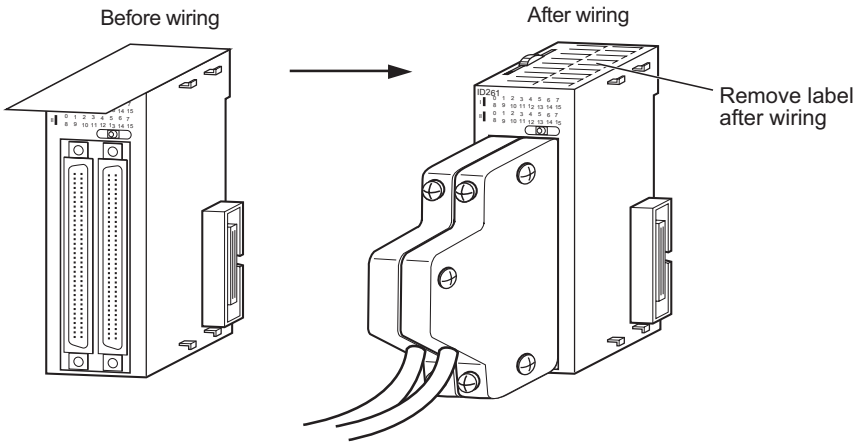

3 When solder-type connectors are being used, be sure not to accidentally short adjacent terminals.
Cover the solder joint with heat-shrink tubing.

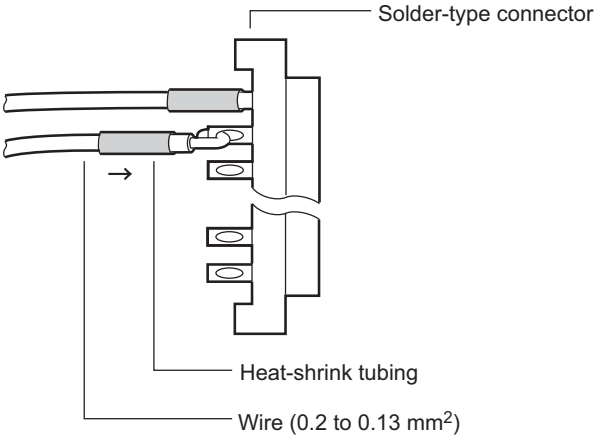

Precautions for Safe Use

If the external power supply to an Output Unit has polarity, connect it with the correct polarity. If the polarity is reversed, current may flow in the reverse direction and damage the connected devices regardless of the operation of the Controller.

4 Assemble the connector (purchased separately).

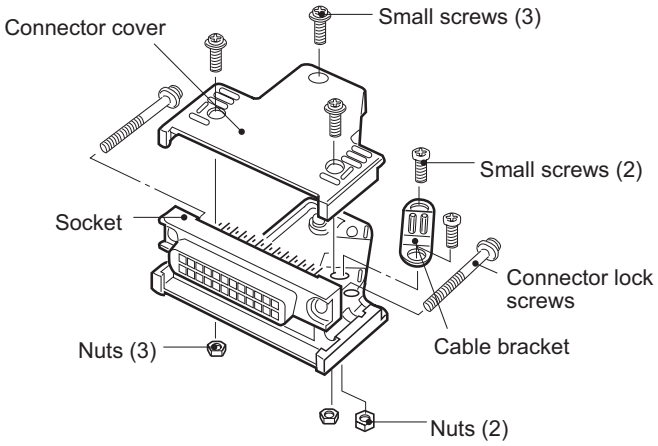

5 Insert the wired connector.

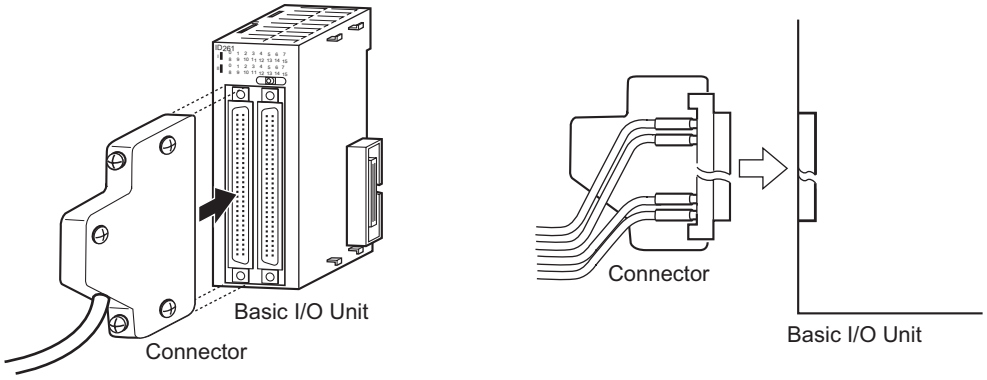

6 (Remove the label or other covering after wiring has been completed to allow air circulation needed for cooling.)

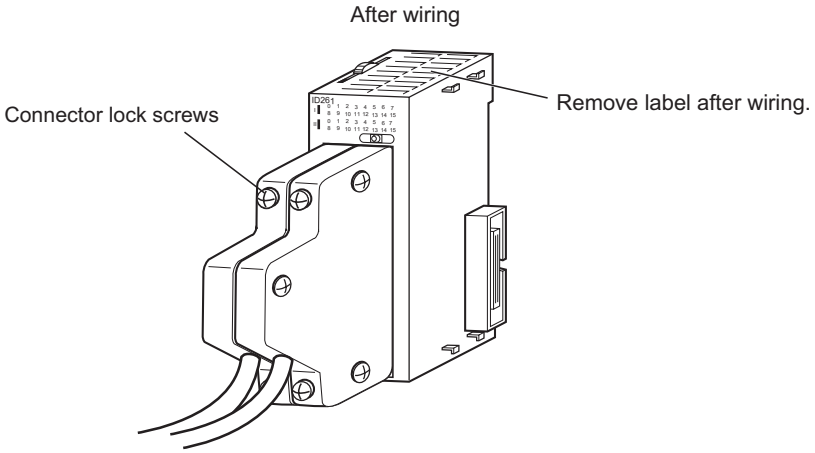

Tighten the connector lock screws to a torque of 0.2 N·m.

4-4-5 Connecting to Connector-Terminal Block Conversion Units or I/O Relay Terminals

OMRON Connecting Cable can be used to connect Basic I/O Units with Connectors to OMRON Connector-Terminal Block Conversion Units or to OMRON I/O Relay Terminals.

For details, refer to *A-2-4 Connecting Connector-Terminal Block Conversion Units and I/O Relay Terminals* on page A-74.

Connection example for Connector-Terminal Block Conversion Unit

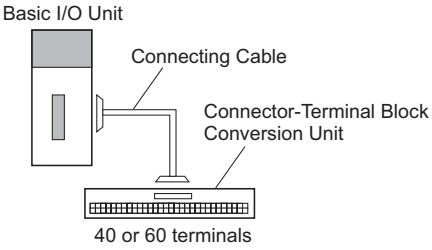

Connection example for I/O Relay Terminals

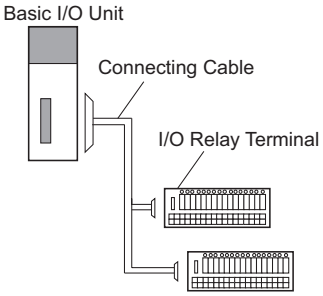

4-4-6 Connecting I/O Devices

Input Devices

Use the following information for reference when selecting or connecting input devices.

● DC Input Units

The following types of DC input devices can be connected.

Contact output

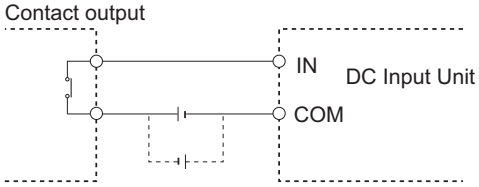

Two-wire DC output

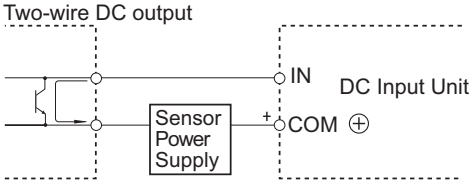

NPN open-collector output

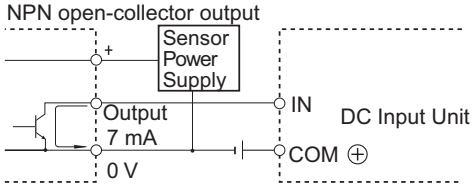

NPN current output

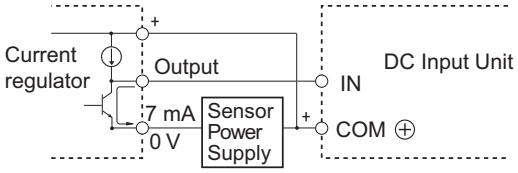

PNP current output

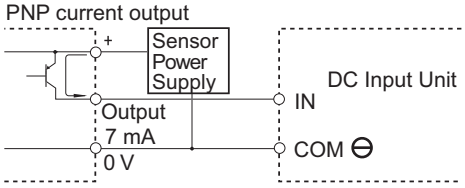

Voltage output

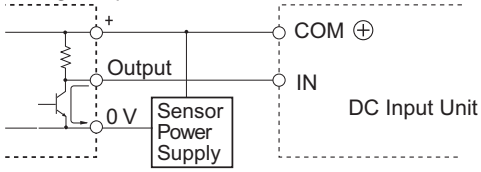

- The circuit below should NOT be used for I/O devices having a voltage output.

Voltage output

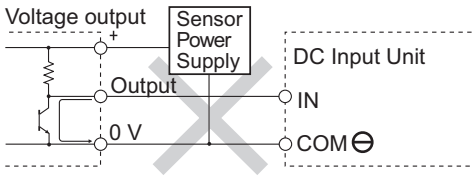

● AC Input Units

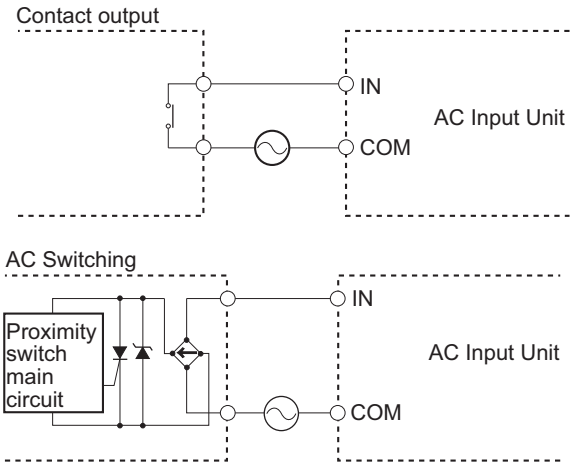

Precautions for Correct Use

When using a reed switch as the input contact for an AC Input Unit, use a switch with an allowable current of 1 A or greater.
If reed switches with smaller allowable currents are used, the contacts may fuse due to surge currents.

● Precautions when Connecting a Two-wire DC Sensor

When using a two-wire sensor with a 24-VDC input device, check that the following conditions have been met. Failure to meet these conditions may result in operating errors.

1. **Relation between voltage when the Controller is ON and the sensor residual voltage:**
   $V_{ON} \leq V_{CC} - V_R$

2. **Relation between voltage when the Controller is ON and sensor control output (load current):**
   I_{OUT} (min) $\leq I_{ON} \leq I_{OUT}$ (max.)
   $I_{ON} = (V_{CC} - V_R - 1.5$ [Controller internal residual voltage]$)/R_{IN}$

   When I_{ON} is smaller than I_{OUT} (min), connect a bleeder resistor R. The bleeder resistor constant can be calculated as follows:
   $R \leq (V_{CC} - V_R)/(I_{OUT}$ (min.) $- I_{ON})$
   Power $W \geq (V_{CC} - V_R)^2/R \times 4$ [allowable margin]

   V_{CC}: ON voltage to Input Unit
   V_R: Sensor output residual current
   I_{ON}: Input Unit ON current
   I_{OUT}: Sensor control current (load current)
   R_{IN}: Input Unit input impedance

3. **Relation between current when the Controller is OFF and sensor leakage current:**
   $I_{OFF} \geq I_{leak}$

Connect a bleeder resistor if I_{leak} is greater than I_{OFF}.

Use the following equation to calculate the bleeder resistance constant.

$R \leq (R_{IN} \times V_{OFF})/(I_{leak} \times R_{IN} - V_{OFF})$

Power $W \geq (V_{CC} - V_R)^2/R \times 4$ [allowable margin]

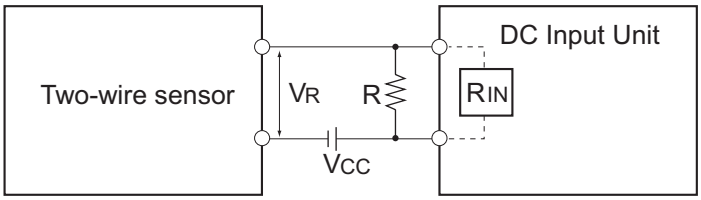

VCC: Power voltage
VON: Controller ON voltage
VOFF: Controller OFF voltage
ION: Controller ON current
IOFF: Controller OFF current
RIN: Controller input impedance
VR: Sensor output residual current
IOUT: Sensor control current (load current)
Ileak: Sensor leakage current
R: Bleeder resistance

4. **Precautions on Sensor Surge Current**
   An incorrect input may occur if a sensor is turned ON after the Controller has started up to the point where inputs are possible.
   Determine the time required for sensor operation to stabilize after the sensor is turned ON and take appropriate measures, such as inserting a timer delay into the user program after turning ON the sensor.

● Programming Example

In this example, the sensor's power supply voltage is used as the input to *SensorVcc*.
A timer delay (100 ms for an OMRON Proximity Sensor) is added to the user program to wait for sensor operation to stabilize.
After the timer times out and then the *SensorOK* input changes to TRUE, a sensor input to the *SensorIn* input causes *InData* to change to TRUE.

Variable	Data type	Initial value	Address	Comment
SensorVcc	BOOL	FALSE	IOBus://rack#0/slot#0/Ch1_In/Ch1_In00	Sensor power supply voltage
SensorIn	BOOL	FALSE	IOBus://rack#0/slot#0/Ch1_In/Ch1_In01	Input from sensor
SensorOK	BOOL	FALSE	---	Sensor stable operation flag
InData	BOOL	FALSE	---	Sensor input data valid flag
egPowerDelay	TON	---	---	Sensor input delay timer

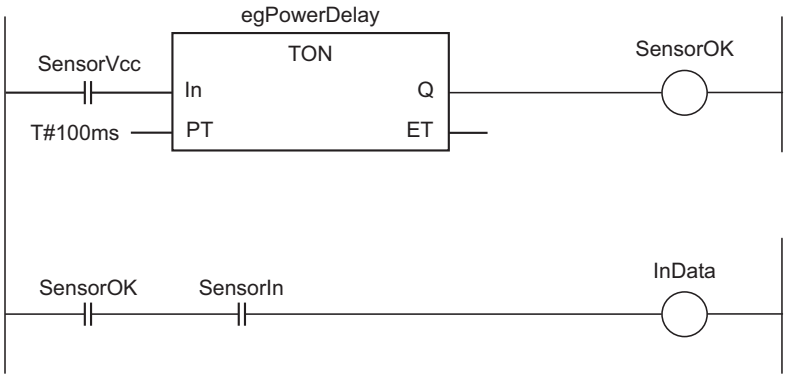

Output Wiring Precautions

● Output Short-circuit Protection

If a load connected to the output terminals is short-circuited, output components and the printed circuit boards may be damaged. To guard against this, incorporate a fuse in the external circuit. Use a fuse with a capacity of about twice the rated output.

● Transistor Output Residual Voltage

A TTL circuit cannot be connected directly to a transistor output because of the transistor's residual voltage. It is necessary to connect a pull-up resistor and a CMOS IC between the two.

● Output Surge Current

When connecting a transistor or triac output to an output device having a high surge current (such as an incandescent lamp), steps must be taken to avoid damage to the transistor or triac. Use either of the following methods to reduce the surge current.

Method 1

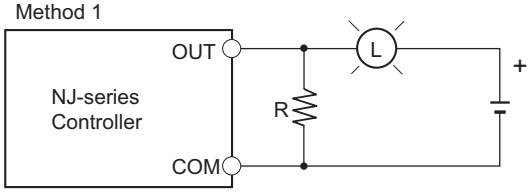

Add a resistor that draws about 1/3 of the dark current consumed by the bulb.

Method 2

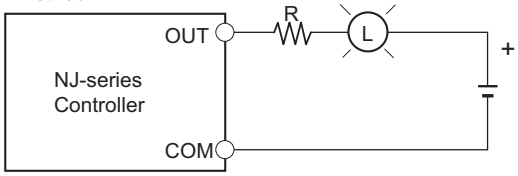

Add a control resistor.

4-4-7 Wiring the Built-in EtherCAT Port

For information on wiring the built-in EtherCAT port, refer to the *NJ/NX-series CPU Unit Built-in EtherNet/IP Port User's Manual (Cat. No. W506)*.

4-4-8 Wiring B7A Interface Units

Terminal Arrangement

Terminal	Name	Function	Word	Appearance
1	Port 1 power supply: V1	Connect to the + terminal of the B7A Link Terminal to be connected to port 1 (only when using a common power supply).	n	Connector with clamps 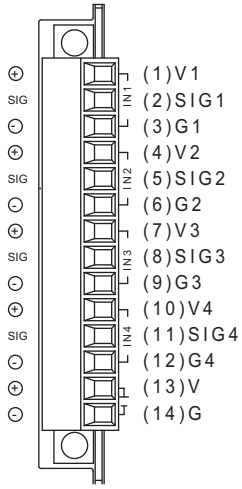
2	Port 1 signal: SIG1	Connect to the SIG terminal of the B7A Link Terminal to be connected to port 1.		
3	Port 1 ground: G1	Connect to the − terminal of the B7A Link Terminal to be connected to port 1.		
4	Port 2 power supply: V2	Connect to the + terminal of the B7A Link Terminal to be connected to port 2 (only when using a common power supply).	n+1	
5	Port 2 signal: SIG2	Connect to the SIG terminal of the B7A Link Terminal to be connected to port 2.		
6	Port 2 ground: G2	Connect to the − terminal of the B7A Link Terminal to be connected to port 2.		
7	Port 3 power supply: V3	Connect to the + terminal of the B7A Link Terminal to be connected to port 3 (only when using a common power supply).	n+2	
8	Port 3 signal: SIG3	Connect to the SIG terminal of the B7A Link Terminal to be connected to port 3.		
9	Port 3 ground: G3	Connect to the − terminal of the B7A Link Terminal to be connected to port 3.		
10	Port 4 power supply: V4	Connect to the + terminal of the B7A Link Terminal to be connected to port 4 (only when using a common power supply).	n+3	
11	Port 4 signal: SIG4	Connect to the SIG terminal of the B7A Link Terminal to be connected to port 4.		
12	Port 4 ground: G4	Connect to the − terminal of the B7A Link Terminal to be connected to port 4.		
13	+ power supply: V	Connect to the + terminal of the external power supply.		
14	− power supply: G	Connect to the − terminal of the external power supply.		

Note Terminals V1, V2, V3, V4, and V are connected internally in the Unit, and terminals G1, G2, G3, G4, and G are connected internally in the Unit.

Preparing and Connecting Cables

Use the following procedure to prepare and connect the cables.

Precautions for Correct Use

Always turn OFF the Unit's power supply and communications power supply before attaching or removing connectors.

1 Preparing the Covering

First, use the following procedure to prepare the cable.

1) **Strip approximately 10 mm of the sheath covering the signal lines to match the crimp terminals. Next, twist together the wires of each signal line firmly.**

2) **Use vinyl tape or a heat-shrink tube to cover the end of the VCTF cable sheath, as shown in the following diagram.**

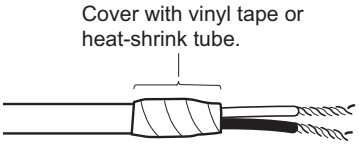

2 Preparing Cable Signal Lines

Attach the crimp terminals to the cable's signal lines.

1) **Attaching Crimp Terminals**
Insert the end of the cable into the terminal and crimp.

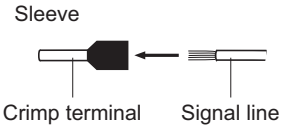

Recommended Crimp Terminals for Cables

Model	Manufacturer
AI-series AI0.75-8GY (Product code: 3200519)	PHOENIX CONTACT
H0.75/14 (Product code: 046290)	Nihon Weidmuller Co., Ltd.
TE-0.75	NICHIFU Co., Ltd.

2) **Insulate the stripped end of each signal line with vinyl tape or heat-shrink tubing.**

Precautions for Correct Use

Always use the specified crimp tool to attach the crimp terminals. If a crimp tool is not used, the cable will not be crimped properly, which may cause the cable to become detached from the terminal. The following crimp tools are available.

Model	Manufacturer
UD6 (Product code: 1204436) or ZA3 Series	PHOENIX CONTACT
Crimper PZ1.5 (Product code: 900599)	Nihon Weidmuller Co., Ltd.
NH77	NICHIFU Co., Ltd.

3 Connecting Cables

Use the following procedure to connect cables to the connection terminals.

1) **Orient the connector properly, and then insert the signal lines fully into the back of each terminal hole in the connector, as shown in the following diagram. (The signal lines are secured in this way, without requiring the use of a tool.)**
If crimp terminals are not used on the signal lines, use a small flat-blade screwdriver to press down on the orange tab to insert the signal lines.

• Power Supply on One Side (Common Power Supply)

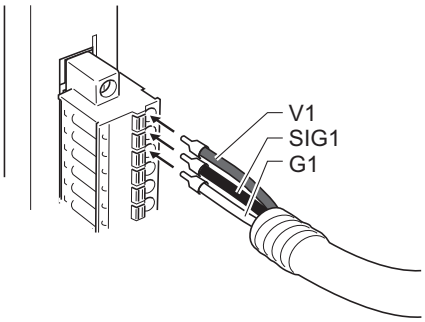

• Power Supply on Both Sides (Separate Power Supplies)

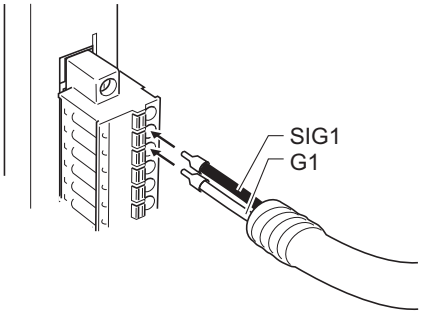

Additional Information

To remove the signal lines from the connector, press down on the orange tab while pulling out the signal line, as shown in the following diagram.

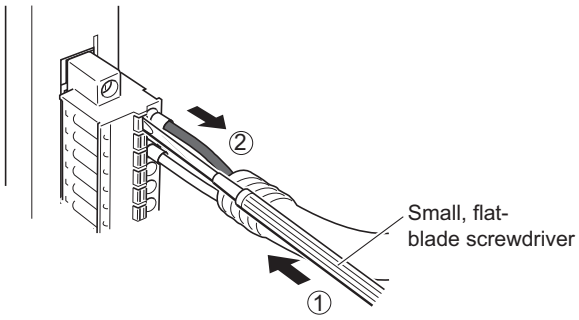

Precautions for Correct Use

To remove the connector from the Unit, fully unscrew the set screws from both sides of the connector, and then remove the connector.
Forcibly pulling the connector while the set screws are still attached may damage the connector.

Connection Diagrams

Precautions for Correct Use

- Confirm that terminals are connected correctly. If connections are incorrect, the internal components of the B7A Interface Unit and B7A Link Terminal may be damaged.
- Route the signal lines in separate ducts both inside and outside the control panel to isolate them from power lines.
- Connect cables at a distance that is within the range given in the specifications.
- Always turn OFF the power to the CPU Unit and all other Units before connecting the communications cables.
- Always lay communications cables within ducts.

● Standard Mode

- Power Supply on One Side (Common Power Supply)

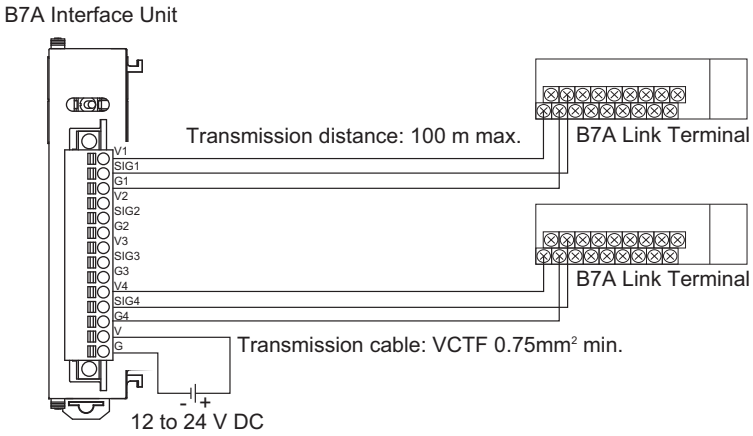

- Power Supply on Both Sides (Separate Power Supplies)

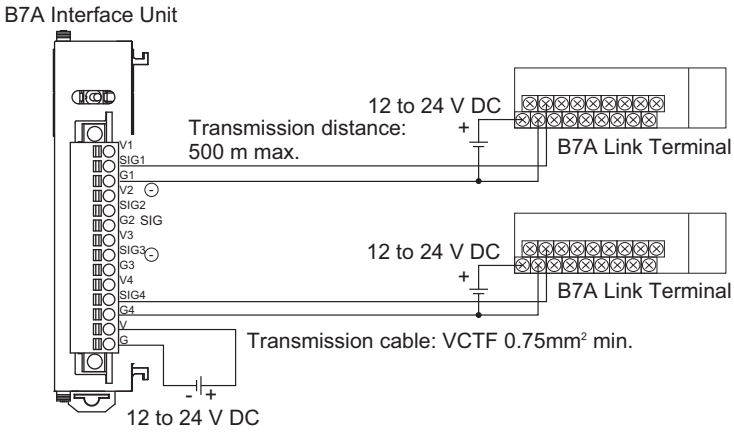

● High-speed Mode

Note If shielded cable is not used, the maximum transmission distance is 10 m regardless of whether a common or separate power supplies are used. (Use VCTF cable of 0.75 mm^2 or higher.)

- Power Supply on One Side (Common Power Supply)

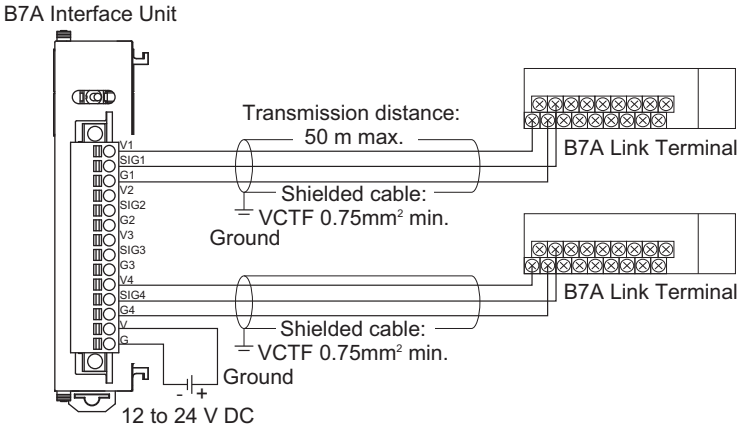

- Power Supply on Both Sides (Separate Power Supplies)

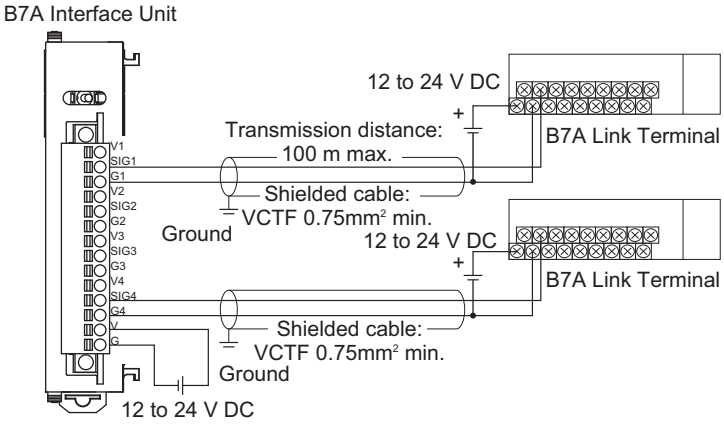

4-5 Control Panel Installation

To ensure system reliability and safety, the system must be designed and configured according to the installation environment (temperature, humidity, vibration, shock, corrosive gases, overcurrent, noise, etc.).

4-5-1 Temperature

Panels have been reduced in size due to space-saving and miniaturization in devices and systems, and the temperature inside the panel may be at least 10 to 15°C higher than outside the panel. Implement the following measures against overheating at the installation site and in the panel, and allow a sufficient margin for the temperature.

High Temperatures

Use the following cooling methods as required, taking into account the ambient temperature and the amount of heating inside the panel.

● Natural Cooling

- Natural cooling relies on natural ventilation through slits in the panel, rather than using cooling devices such as fans or coolers. When using this method, observe the following points.
- Do not install the Controller at the top of the panel, where hot air tends to stagnate.
- To provide ventilation space above and below the Controller, leave sufficient distance from other devices, wiring ducts, etc.
- Do not mount the Units in the wrong direction (e.g., vertically or upside down). Doing so may cause abnormal heating in the Controller.
- Do not install the Controller directly above any heat-generating equipment, such as heaters, transformers, and devices with high resistance.
- Do not install the Controller in a location exposed to direct sunlight.

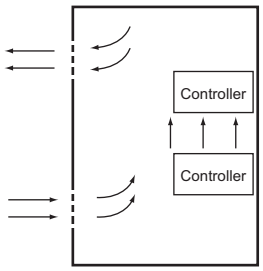

Natural Cooling

- **Forced Ventilation (by Fan at Top of Panel)**

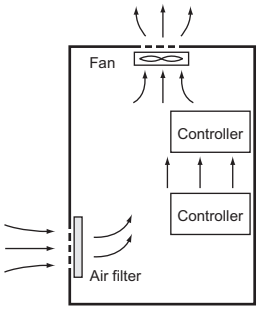

Forced Ventilation Method

- **Forced Air Circulation (by Fan in Closed Panel)**

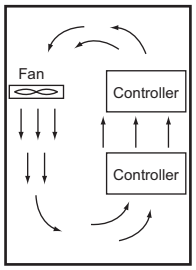

Forced Air Circulation

- **Room Cooling (Cooling the Entire Room Where the Control Panel Is Located)**

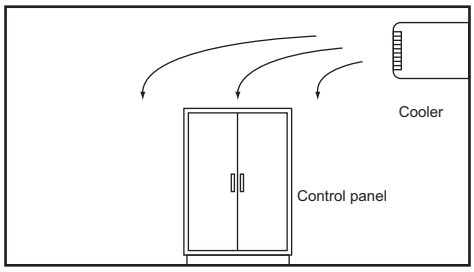

Room Cooling

Low Temperatures

The Controller may not start normally if the temperature is below 0°C when the power is turned ON. Maintain an air temperature of at least approximately 5°C inside the panel, by implementing measures such as installing a low-capacity space heater in the panel.
Alternatively, leave the Controller power ON to keep the Controller warm.

4-5-2 Humidity

Rapid temperature changes can cause condensation to occur, resulting in malfunctioning due to short-circuiting.
When there is a possibility of this occurring, take measures against condensation, such as leaving the Controller power ON at night or installing a heater in the control panel to keep it warmer.

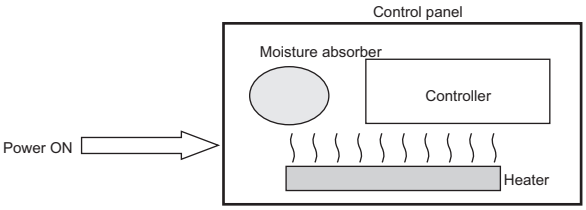

Examples of Measures against Condensation

4-5-3 Vibration and Shock

The Controller is tested for conformity with the sine wave vibration test method (IEC 60068-2-6) and the shock test method (IEC 60068-2-27) of the Environmental Testing for Electrotechnical Products. It is designed so that malfunctioning will not occur within the specifications for vibration and shock. If, however, the Controller is to be used in a location in which it will be directly subjected to regular vibration or shock, then implement the following countermeasures:

- Either separate the control panel from the source of the vibration or shock, or secure the Controller and the panel with rubber padding to prevent vibration.
- Make the building or the floor vibration-resistant.
- To prevent shock when other devices in the panel such as electromagnetic contactors operate, secure either the source of the shock or the Controller with rubber padding.

4-5-4 Atmosphere

Using the Controller in any of the following locations can cause defective contact with connectors and corrosion of components. Implement countermeasures such as purging the air as required.

- In locations exposed to dust, dirt, salt, metal powder, soot, or organic solvents, use a panel with an airtight structure. Be careful of temperature increases inside the panel.
- In locations exposed to corrosive gas, purge the air inside the panel to clear the gas and then pressurize the inside of the panel to prevent gas from entering from outside.
- In locations where flammable gas is present, either use an explosion-protected construction or do not use the Controller.

4-5-5 Electrical Environment

When installing or wiring devices, make sure that there will be no danger to people and that noise will not interfere with electrical signals.

Controller Installation Location

Install the Controller as far away as possible from high-voltage (600 V or higher) and power devices to ensure safe operation and maintenance.

Example of Recommended Equipment Arrangement

OK

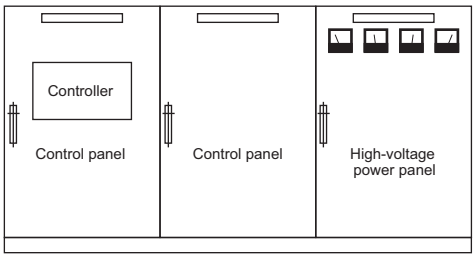

Example of Poor Equipment Arrangement

NG

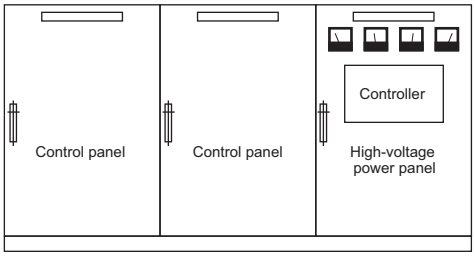

Examples of Equipment Arrangement in Panel with High-voltage Devices

Arrangement of Controller and Units

Observe the following points.

- Place a Unit that does not generate much noise next to the CPU Unit, such as an Input Unit or Communications Unit.
- The coils and contacts in electromagnetic contactors and relays in an external circuit are sources of noise. Do not install them close to the Controller. Locate them at least 100 mm away from the Controller.

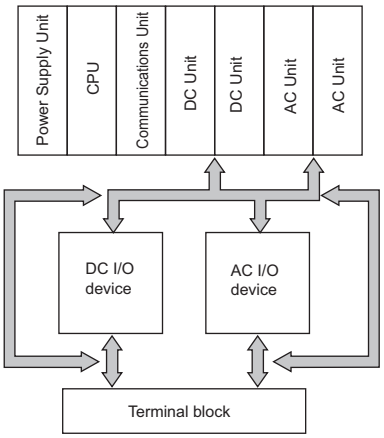

Example of Arrangement in Panel

Wire Layout for the Power Supply System

Observe the following points when wiring the power supply system.

- Separate the Controller power supply from the I/O device power supply and install a noise filter near the Controller power supply feed section.
- Use an isolating transformer to significantly reduce noise between the Controller and the ground. Install the isolating transformer between the Controller power supply and the noise filter, and do not ground the secondary coil of the transformer.
- Keep the wiring between the transformer and the Controller as short as possible, twist the wires well, and keep the wiring separate from high-voltage and power lines.

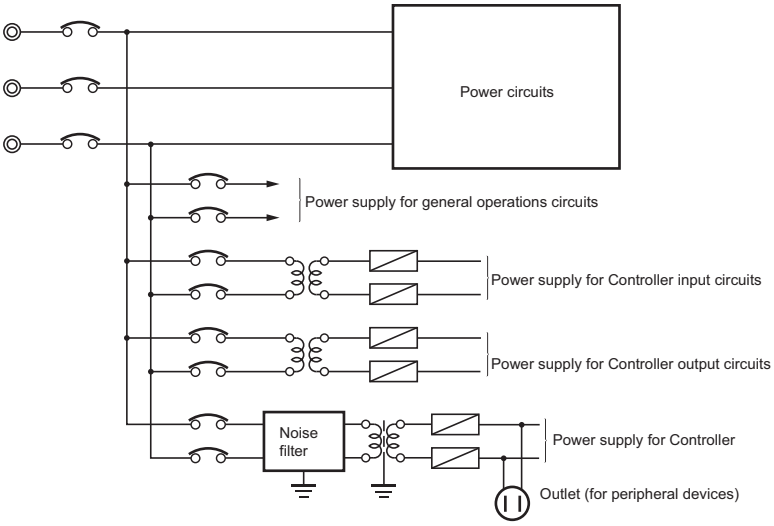

Power Supply System Diagram

Wiring External I/O Signal Lines

Observe the following points when wiring external I/O signal lines.

- To absorb reverse electromotive force when an inductive load is connected to an output signal, connect a surge suppressor near the inductive load in an AC circuit, or connect a diode near the inductive load in a DC circuit.

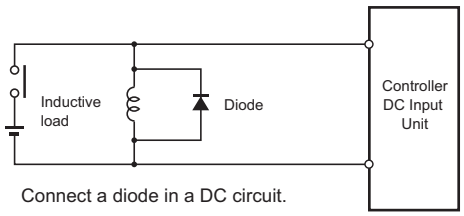

Connect a diode in a DC circuit.

Input Signal Noise Countermeasures

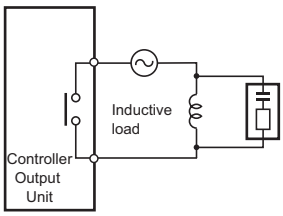

Connect a surge suppressor in an AC circuit.

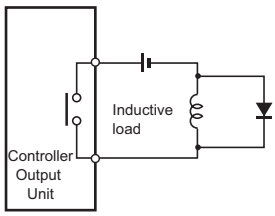

Connect a diode in a DC circuit.

Output Signal Noise Countermeasures

- Never bundle output signal lines with high-voltage or power lines, and do not route them in close proximity or parallel to such lines.
  If output signal lines must be routed in close proximity to such lines, place them in separate ducts or conduits and be sure to ground the ducts or conduits.

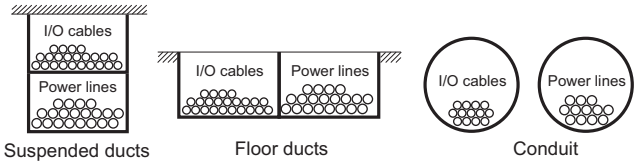

Suspended ducts　Floor ducts　Conduit

I/O Cable Arrangement

- If the signal lines and power lines cannot be routed in separate ducts, use shielded cable. Connect the shield to the ground terminal at the Controller, and leave it unconnected at the input device.
- Wire the lines so that common impedance does not occur.
  Such wiring will increase the number of wires, so use common return circuits.
  Use thick wires with sufficient allowance for the return circuits, and bundle them with lines of the same signal level.
- For long I/O lines, wire the input and output signal lines separately.
- Use twisted-pair wires for pilot lamps (and particularly lamps with filaments).
- Use countermeasures, such as CR surge absorbers and diodes, for input device and output load device noise sources, as required.

External Wiring

Wiring, and noise countermeasures in particular, are based on experience, and it is necessary to closely manage wiring based on experience and information in the manuals.

● Wiring Routes

Each of the following combinations includes different signal types, properties, or levels. They will cause the signal-to-noise ratio to drop due to factors such as electrical induction. As a general rule when wiring, either use separate cables or separate wiring routes for these items. Future maintenance operations and changes to the system will also be made easier by carefully organizing the wiring from the start.

- Power lines and signal lines
- Input signals and output signals
- Analog signals and digital signals
- High-level signals and low-level signals
- Communications lines and power lines
- DC signals and AC signals

- High-frequency devices (such as Inverters) and signal lines (communications)

● Wiring Methods

Observe the following points when wiring power supply and signal cables.

- When routing signal cables with differing characteristics through the same duct, always keep them separated.
- As much as possible, avoid routing multiple power supply lines through the same duct.
  If it cannot be avoided, then construct a partition between them in the duct and ground the partition.

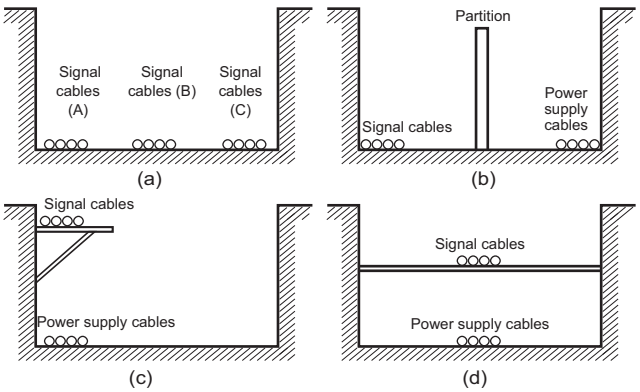

Partitioning Methods for Signal and Power Supply Cables

- To avoid overheating the conduits when using conduits for wiring, do not place wires for a single circuit in separate conduits.

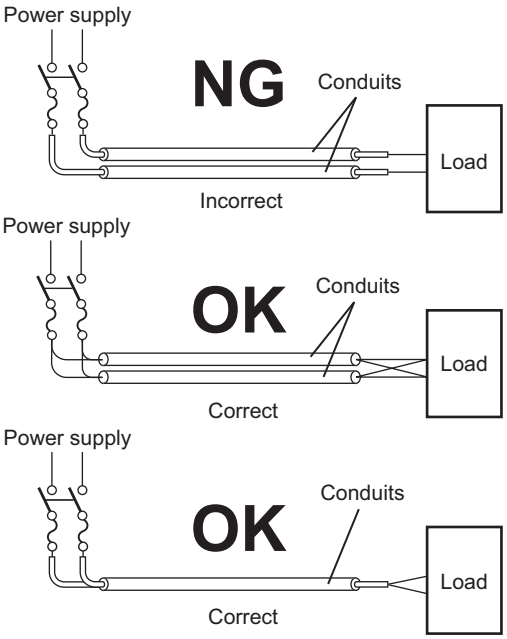

Parallel Wiring (Single Phase)

- Power cables and signal cables adversely affect each other. Do not wire them in parallel.
- Noise induction may occur if the Controller is installed in a panel that includes high-voltage devices. Wire and install them as far apart as possible. (*Controller Installation Location* on page 4-56)
- Either install the Controller a minimum of 200 mm away from high-voltage lines or power lines, or place the high-voltage lines or power lines in metal tubing and completely ground the metal tubing to 100 Ω or less.

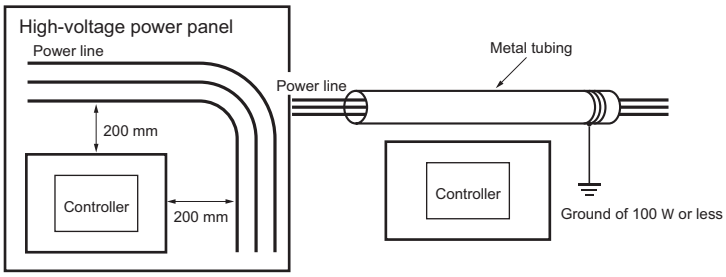

Example: Separating Controller from Power Lines

● Other Precautions

- Basic I/O Units have both plus and minus commons, so pay attention to the polarity when wiring.

4-5-6 Grounding

This section describes the earthing methods and precautions.
Refer to *4-4-1 Power Supply Wiring* on page 4-28 for details on the grounding of the Controller.

Considerations for Earthing Methods

Local potential fluctuations due to lightning or noise occurred by power devices will cause potential fluctuations between ground terminals of devices. This potential fluctuation may result in device malfunction or damage. To prevent this, it is necessary to suppress the occurrence of a difference in electrical potential between ground terminals of devices. You need to consider the earthing methods to achieve this objective.

The recommended earthing methods for each usage condition are given in the following table.

Specification of communications cables for EtherCAT and EtherNet/IP	Earthing methods			
	Equipotential bonding system	Star earthing		Daisy chain
		Connecting devices and noise sources to separate earth electrodes	Connecting devices and noise sources to a common earth electrode	
The cable shield connected to the connector hood at both ends of the communications cable*1	Recommended	Recommended	Not recommended	Not recommended
The cable shield connected to the connector hood at only one end of the communications cable*2	Recommended	Recommended	Not recommended	Not recommended
Neither EtherCAT nor EtherNet/IP used	Recommended	Recommended	Not recommended	Not recommended

*1. Use this cable when using EtherCAT or when using EtherNet/IP with 1000BASE-T.
*2. You can use either of cables when not using EtherCAT or when using EtherNet/IP with 100BASE-TX or 10BASE-T.

Additional Information

- In a country or region where the earthing method is regulated, you must comply with the regulations. Refer to the applicable local and national ordinances of the place where you install the system, or other international laws and regulations.
- For details on wiring EtherCAT or EtherNet/IP, refer to the *NJ/NX-series CPU Unit Built-in EtherCAT Port User's Manual (Cat. No. W505)* or the *NJ/NX-series CPU Unit Built-in EtherNet/IP Port User's Manual (Cat. No. W506)*.
- Ethernet switches are used with the EtherNet/IP. For information on the environmental resistance of the Ethernet switch to use, the grounding between Ethernet switches, or the specifications of cables, ask the Ethernet switch manufacturer.

Each of these earthing methods is given below.

Equipotential Bonding System

Equipotential bonding is an earthing method in which steel frames and building structures, metal ducts and pipes, and metal structures in floors are connected together and make connections to the earth trunk line to achieve a uniform potential everywhere across the entire building. We recommend this earthing method.

The following figure shows an example of an equipotential bonding system.
Connect the main earthing terminal and building structures together with equipotential bonding conductors and embed the mesh ground line in each floor.
Connect the ground line of each control panel to the equipotential bonding system.

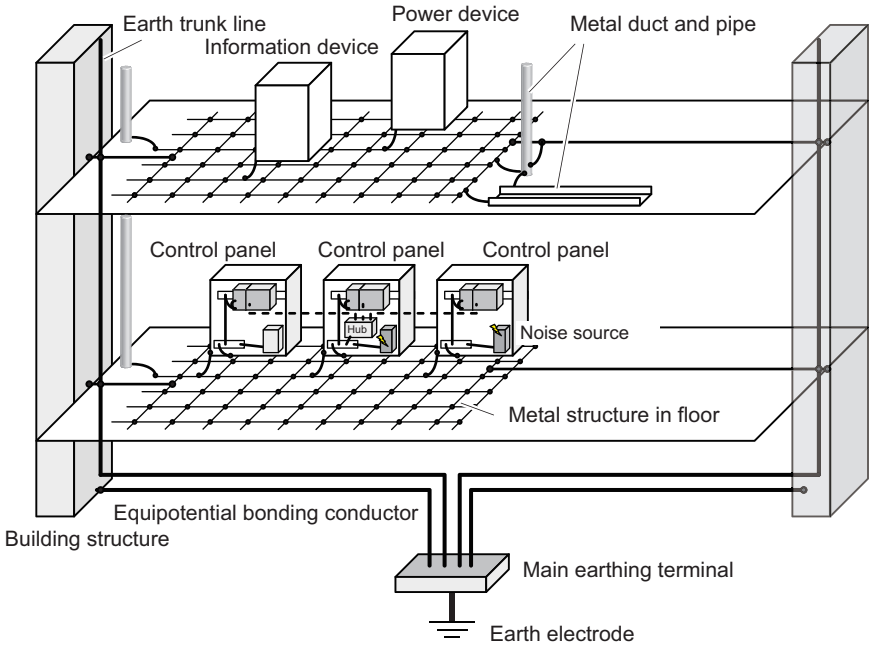

Star Earthing

If the earthing method used for the building is not equipotential bonding or the earthing system is unknown, choose a) from among the earthing methods given below.

a. Connecting devices and noise sources to separate earth electrodes
This is an earthing method to separately ground an earth electrode of the device that is connected with a communications cable or other devices and an earth electrode of a high-power device that could be a noise source, such as a motor or inverter.

Each earth electrode must be ground to 100 Ω or less.
Connect the ground lines of the device that is connected with a communications cable and other devices as a bundle to a single earth electrode. Be sure that the earth electrode is separated by a minimum of 10 m from any other earth electrode of a device that could be a noise source.

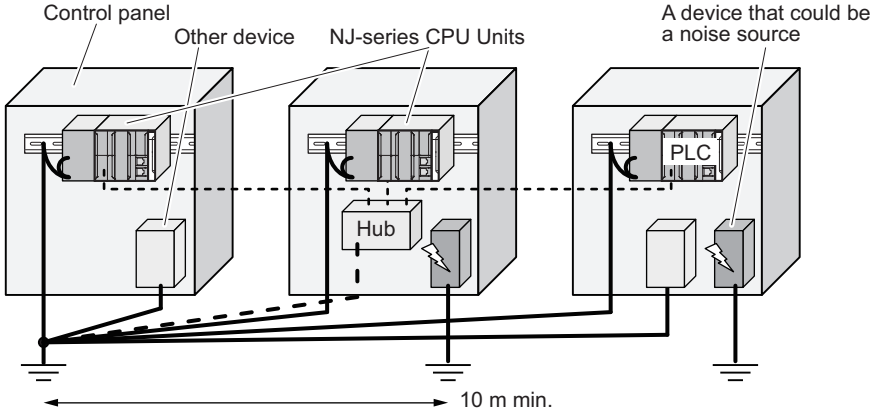

b. Connecting devices and noise sources to a common earth electrode
This is an earthing method to connect the device that is connected with a communications cable, other devices, and a device that could be a noise source, to a common earth electrode.
This earthing method is not recommended because the device that could be a noise source may interfere electromagnetically with other devices.

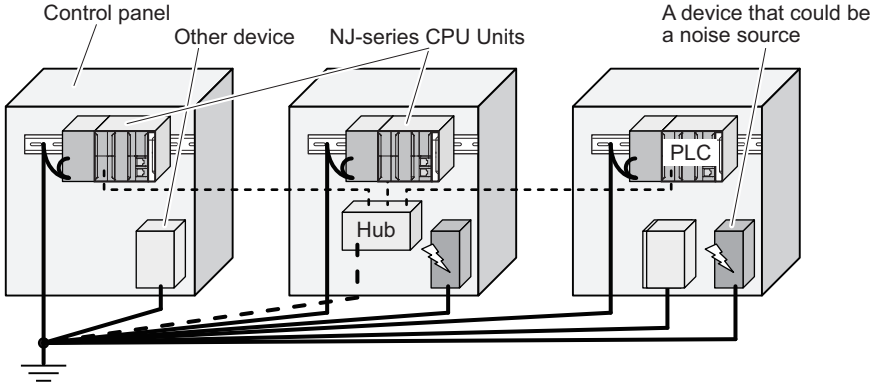

● Daisy Chain

This is an earthing method to connect the device that is connected with a communications cable, other devices, and a device that could be a noise source using a daisy-chain topology to a common earth electrode.
This earthing method is not recommended because the device that could be a noise source may interfere electromagnetically with other devices.

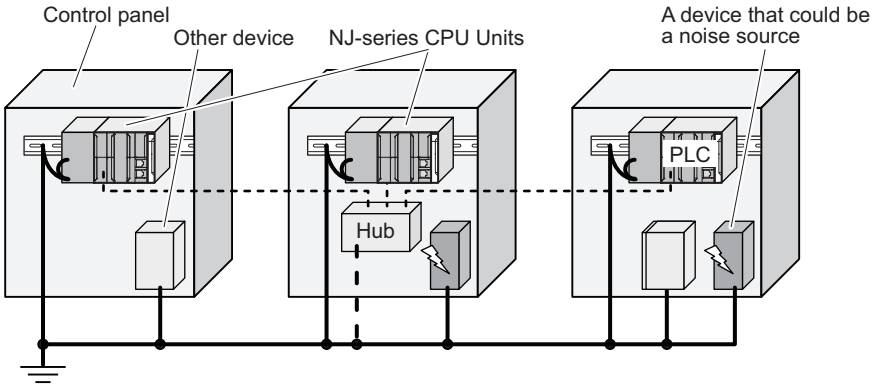

Precautions for Grounding

- To prevent electrical shock, do not connect devices to ground poles (or steel frames) with non-equalized potential to which multiple devices are connected.
- Use a ground pole as close to the Controller as possible and keep the ground line as short as possible.
- If the same ground is used for both the signal lines and the enclosure, isolate the channel base (a grounded metal plate inside a control panel) with an insulating material

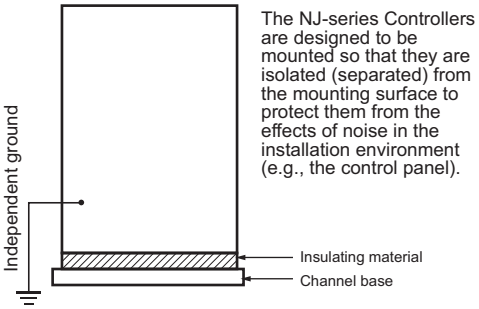

Example: Insulating and Grounding an Enclosure

- If high-frequency equipment is present, then ground not only the high-frequency equipment but also the panel itself in which the Controller is housed.
- As shown in the following diagram, when using shielded cable for I/O wiring, connect the shield near the Controller to the enclosure ground terminal.
  Follow the instructions in the Communications Unit manual for preparing shielded communications cable.

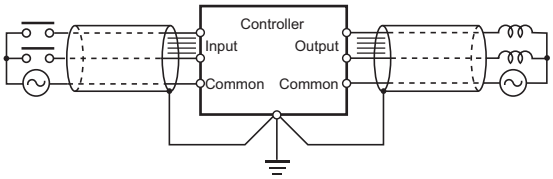

Shielded Cable Ground

5

Troubleshooting

This section describes the overview of methods for checking errors.

5-1 Overview of Troubleshooting 5-2

5-1 Overview of Troubleshooting

You manage all of the errors that occur on the NJ-series Controller as events. This allows you to see what errors have occurred and find corrections for them with the same methods for the entire range of errors that is managed (i.e., CPU Unit, NX-series Slave Terminals, EtherCAT slaves,*1 and CJ-series Units).

*1. Only Sysmac devices are supported.

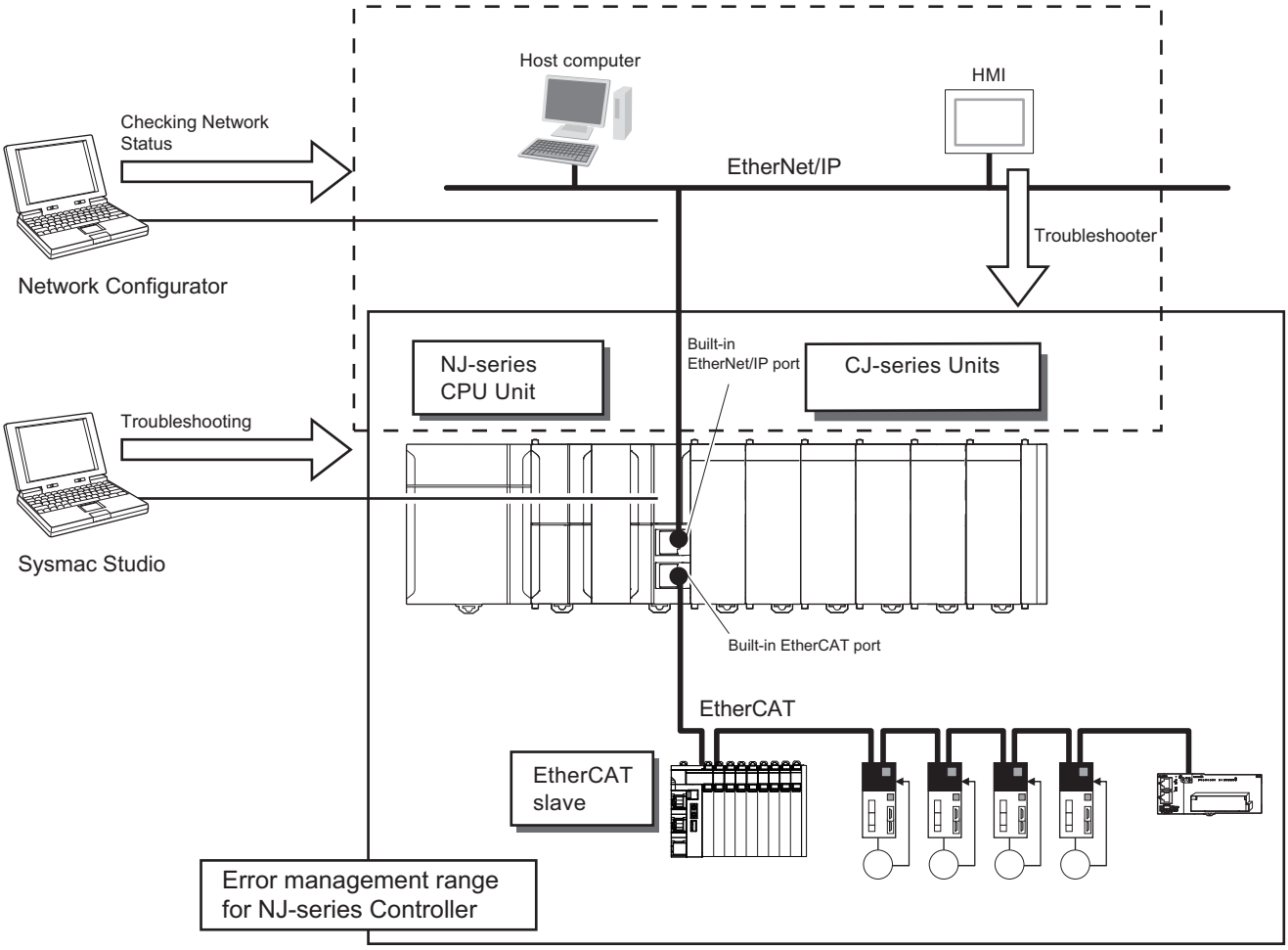

You can use the troubleshooting functions of the Sysmac Studio or the Troubleshooter on an HMI to quickly check for errors that have occurred and find corrections for them.

Refer to the *NJ/NX-series Troubleshooting Manual (Cat. No. W503)* for types of errors, meanings, specific corrections when errors occur and for troubleshooting information on the entire NJ-series Controller.

6

Inspection and Maintenance

This section describes the required inspections and maintenance. It also describes the service lives and replacement procedures for the Battery and Power Supply Units.

6-1 Periodic Maintenance and Inspection 6-2
6-1-1 Periodic Inspection 6-2
6-1-2 Unit Replacement Precautions 6-3

6-2 Replacing the Battery 6-5
6-2-1 Battery Replacement 6-5
6-2-2 Operation without a Battery 6-8

6-1 Periodic Maintenance and Inspection

Daily or periodic inspections are required in order to maintain the Controller's functions in peak operating condition.

6-1-1 Periodic Inspection

Although the major components in NJ-series Controllers have an extremely long life time, they can deteriorate under improper environmental conditions. Periodic inspections are thus required to ensure that the required conditions are being kept.
Inspection is recommended at least once every six months to a year, but more frequent inspections will be necessary in adverse environments.
Take immediate steps to correct the situation if any of the conditions in the following table are not met.

Periodic Inspection Points

No.	Item	Inspection	Criteria	Action
1	Source Power Supply	Check for voltage fluctuations at the power supply terminals.	The voltage must be within the allowable voltage fluctuation range. 85 to 264 VAC (+10%/−15%)	Use a voltage tester to check the power supply at the terminals. Take necessary steps to bring voltage fluctuations within limits.
2	I/O Power Supply	Check for voltage fluctuations at the I/O terminals.	Voltages must be within specifications for each Unit.	Use a voltage tester to check the I/O power supply at the terminals. Take necessary steps to bring voltage fluctuations within limits.
3	Ambient environment	Check the ambient temperature. (Inside the control panel if the Controller is in a control panel.)	0 to 55°C	Use a thermometer to check the temperature and ensure that the ambient temperature remains within the allowed range of 0 to 55°C.
		Check the ambient humidity. (Inside the control panel if the Controller is in a control panel.)	Relative humidity must be 10% to 90% with no condensation.	Use a hygrometer to check the humidity and ensure that the ambient humidity remains between 10% and 90%. Make sure that condensation does not occur due to rapid changes in temperature.
		Check that the Controller is not in direct sunlight.	Not in direct sunlight	Protect the Controller if necessary.
		Check for accumulation of dirt, dust, salt, metal powder, etc.	No accumulation	Clean and protect the Controller if necessary.
		Check for water, oil, or chemical sprays hitting the Controller.	No spray	Clean and protect the Controller if necessary.
		Check for corrosive or flammable gases in the area of the Controller.	No corrosive or flammable gases	Check by smell or use a sensor.
		Check the level of vibration or shock.	Vibration resistance and shock resistance must be within specifications.	Install cushioning or shock absorbing equipment if necessary.
		Check for noise sources near the Controller.	No significant noise sources	Either separate the Controller and noise source or protect the Controller.

No.	Item	Inspection	Criteria	Action
4	Installation and wiring	Check that each Unit is connected and locked to the next Unit securely.	No looseness	Press the connectors together completely and lock them with the sliders.
		Check that cable connectors are fully inserted and locked.	No looseness	Correct any improperly installed connectors.
		Check for loose screws in external wiring.	No looseness	Tighten loose screws with a Phillips-head screwdriver.
		Check crimp connectors in external wiring.	Adequate spacing between connectors	Check visually and adjust if necessary.
		Check for damaged external wiring cables.	No visible damage	Check visually and replace cables if necessary.
5	User-serviceable parts	Battery Set Check whether the battery has reached its service life. CJ1W-BAT01	Service life expectancy is 5 years at 25°C. (From 0.75 to 5 years depending on model, and ambient temperature.)	Replace the battery when its service life has passed even if a battery error has not occurred. (Battery life depends upon the model, and ambient conditions.)

Tools Required for Inspections

● Required Tools

- Slotted and Phillips-head screwdrivers
- Voltage tester or digital voltmeter
- Industrial alcohol and clean cotton cloth

● Tools Required Occasionally

- Oscilloscope
- Thermometer and hygrometer (humidity meter)

6-1-2 Unit Replacement Precautions

Check the following after replacing any faulty Unit.

- Do not replace a Unit until the power is turned OFF.
- Check the new Unit to make sure that there are no errors.
- If you return a faulty Unit for repair, describe the problem in as much detail as possible, enclose this description with the Unit, and return the Unit to your OMRON representative.
- For poor contact, take a clean cotton cloth, soak the cloth in industrial alcohol, and carefully wipe the contacts clean. Be sure to remove any lint prior to remounting the Unit.

Precautions for Correct Use

- If you replaced the CPU Unit, transfer the user program and the variables with a Retain attribute (i.e., variables retained during power interruptions) that are required at startup, before you start operation.
  Unexpected accidents may occur depending on the relation between the user program and the status of variables retained during power interruptions.
- Routing tables, network parameters, and CPU Bus Unit system settings are stored in the CPU Unit. Be sure to reload this data if you replace the CPU Unit.
- If you replace a slave or Unit, refer to operation manual for the slave or Unit for information on the data required for individual slaves or Units and redo the necessary settings.

6-2 Replacing the Battery

The Battery in the NJ-series CPU Unit must be replaced periodically as preventative maintenance. (The Battery is a backup power supply for the CPU Unit's internal clock and the variables that are retained during power interruptions.) This section describes how to replace the Battery.

6-2-1 Battery Replacement

Purpose of the Battery

The Battery maintains the CPU Unit internal clock and the variables retained during power interruptions while the main power supply is OFF.
If the Battery is not installed or Battery voltage drops too low, the internal clock will stop and the variables that are retained for power interruptions will be lost when the main power supply goes OFF.

Battery Service Life and Replacement Period

Model	Approx. maximum lifetime	Approx. minimum lifetime*1	Approx. typical lifetime*1
NJ501-□□□□	5 years	1.1 years	5 years
NJ301-□□□□	5 years	2.0 years	5 years
NJ101-□□□□	5 years	2.0 years	5 years

*1. The minimum lifetime is the memory backup time at an ambient temperature of 55°C.
The typical lifetime is the memory backup time at an ambient temperature of 25°C.

Memory Backup Time

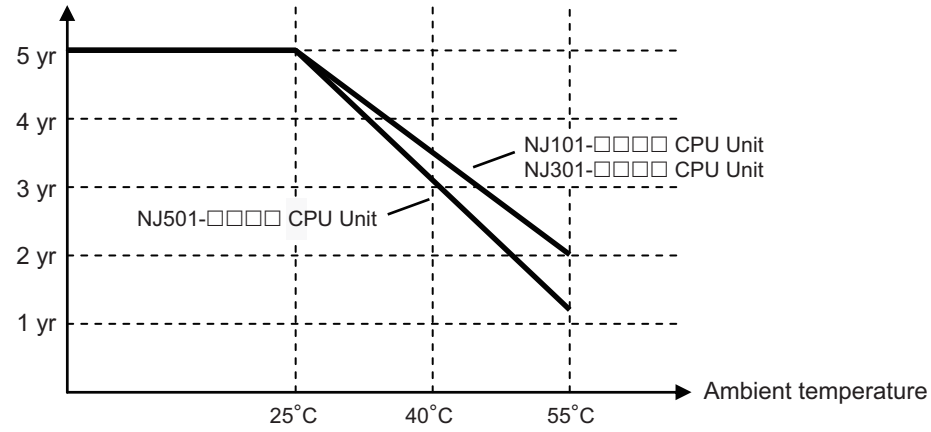

* This graphic is for reference only.
This is the value when the power ON time rate is 0% (power OFF).

Additional Information

The Battery installed at the time of purchase is only for monitoring purpose to test the battery backup function. The Battery is exhausted depending on the period from factory checking to actual operation, thus it may not satisfy specified battery lifetime.

Low Battery Indicators

If the Controller Setup has been set to detect a low-battery error, the *ERROR* indicator on the front of the CPU Unit will flash when the battery is nearly discharged.

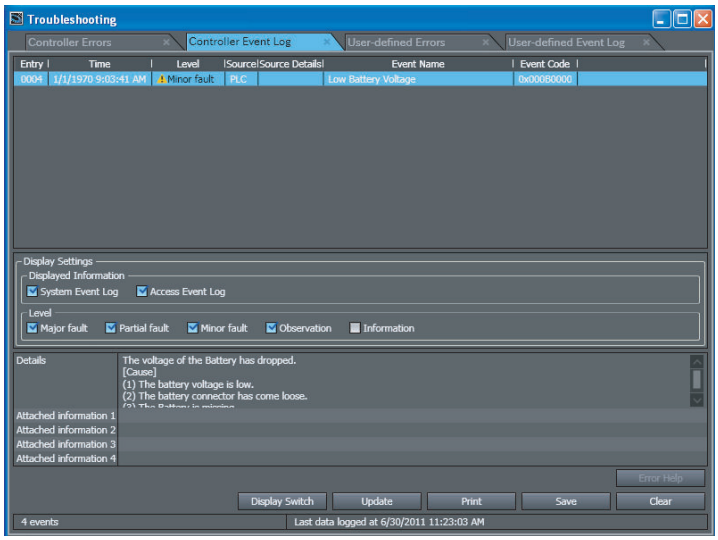

If the *ERROR* indicator flashes, connect the Sysmac Studio, and then check the CPU Unit's Battery connection if the Sysmac Studio shows a *Low Battery Voltage*, *Battery-backup Memory Check Error*, or *Real-Time Clock Stopped* event. If the Battery is properly connected, replace the Battery with a new one as soon as possible.

Once a low-battery error has been detected, it will take 5 days (at an ambient temperature of 25°C) before the battery fails if power has been supplied at least once a day.
Clock data and variables that are retained during power interruptions can be retained by ensuring that the CPU Unit power is not turned OFF until the Battery has been replaced.

Precautions for Correct Use

The Battery will loose its charge faster at high ambient temperatures.

● Replacement Battery

Use the CJ1W-BAT01 Battery Set.

Precautions for Correct Use

Be sure to install a replacement Battery within two years of the production date shown on the Battery label.

Production Date

OMRON
CJ1W-BAT01
08-06

Manufactured in June 2008.

Replacement Procedure

Use the following procedure to replace the battery when the previous battery has become completely discharged.

Precautions for Safe Use

We recommend replacing the battery with the power OFF to prevent the CPU Unit's sensitive internal components from being damaged by static electricity. The battery can be replaced without turning OFF the power supply. To do so, always touch a grounded piece of metal to discharge static electricity from your body before starting the procedure.
After replacing the Battery, connect the Sysmac Studio and clear the *Low Battery Voltage* event.

1 Turn OFF the power supply to the Controller.
If the CPU Unit has not been ON, turn it ON for at least five minutes and then turn it OFF.

Additional Information

If power is not turned ON for at least five minutes before replacing the battery, the capacitor that backs up memory when the battery is removed will not be fully charged and memory may be lost before the new battery is inserted.

2 Open the compartment on the upper left of the CPU Unit and carefully draw out the battery.

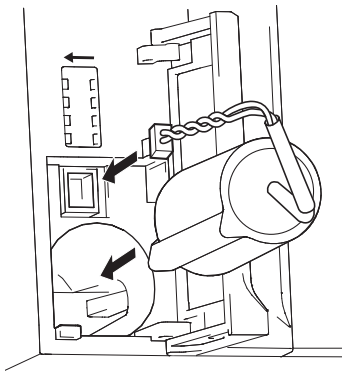

Precautions for Safe Use

- Before you replace the Battery, you must first supply power to the Controller for at least 5 minutes, and then you must complete this procedure within five minutes at 25°C after turning OFF the power to the CPU Unit to ensure memory backup. If power is not supplied for at least 5 minutes, the saved data may be lost.
- Never short-circuit the battery terminals; never charge the battery; never disassemble the battery; and never heat or incinerate the battery. Doing any of these may cause the battery to leak, heat, ignite, or rupture.
- Never use a battery that has been dropped on the floor or otherwise subject to shock. It may leak.
- UL standards require that batteries be replaced by experienced technicians. Always place an experienced technician in charge or battery replacement.
- Turn ON the power after replacing the battery for a CPU Unit that has been unused for a long time. Leaving the CPU Unit unused again without turning ON the power even once after the battery is replaced may result in a shorter battery life.

Additional Information

The *Low Battery Voltage* event is cleared automatically the next time the Controller is turned ON after replacing the Battery.

6-2-2 Operation without a Battery

NJ-series CPU Units do not support a battery-free operation function such as CJ-series CPU Units. If a Battery is not connected or the Battery voltage is too low, the following operation occurs.

- A *Low Battery Voltage*, *Battery-backup Memory Check Error*, and *Real-Time Clock Stopped* are detected.
- The system-defined variable *_RetainFail* (Power Retention Failure Flag) will be TRUE.

● Retaining or Not Retaining Data in the CPU Unit

Data in the CPU Unit will be retained or not retained as described in the following table according to whether there is a Battery.

<table>
<tr><th colspan="4" rowspan="2">Type of data</th><th colspan="2">Power turned ON</th></tr>
<tr><th>Battery</th><th>No Battery</th></tr>
<tr><td colspan="4">User program</td><td colspan="2" rowspan="2">Values before power interruption will be retained by the built-in non-volatile memory.</td></tr>
<tr><td colspan="4">Controller Configurations and Setup</td></tr>
<tr><td colspan="4">Event log</td><td>Values before power interruption will be retained.</td><td>Values before power interruption will not be retained.</td></tr>
<tr><td colspan="4">Clock data</td><td>Correct values</td><td>Illegal value</td></tr>
<tr><td rowspan="6">Values of variables</td><td colspan="3">No Retain attribute</td><td>Initial values*1</td><td>Initial values*1</td></tr>
<tr><td colspan="3">Retain attribute</td><td>Values before power interruption will be retained.</td><td>Initial values*1</td></tr>
<tr><td rowspan="4">AT (allocated memory) specification</td><td colspan="2">Non-retained areas: CIO and Work Areas</td><td>Initial values*1</td><td>Initial values*1</td></tr>
<tr><td rowspan="2">Retained areas: DM Area</td><td>Words allocated to Special Units (and device variables for Special Units)</td><td rowspan="3">Values before power interruption will be retained.</td><td rowspan="3">Initial values*1</td></tr>
<tr><td>Words that are not allocated to Special Units</td></tr>
<tr><td colspan="2">Retained areas: Holding and EM Areas</td></tr>
<tr><td colspan="3" rowspan="2">CJ-series Unit memory</td><td>Non-retained areas: CIO and Work Areas</td><td>Cleared to zeros.</td><td>Cleared to zeros.</td></tr>
<tr><td>Retained areas: Holding, DM, and EM Areas</td><td>Values before power interruption will be retained.</td><td>Undefined</td></tr>
</table>

*1. If the initial value setting is blank, the initial value for the data type is used. For example, the initial value of BOOL data is FALSE and the initial value of integer data is 0. Refer to the *NJ/NX-series CPU Unit Software User's Manual (Cat. No. W501)* for details on the initial values.

A

Appendices

The appendices provide the specifications of the Basic I/O Units, Unit dimensions, load short-circuit protection detection, line disconnection detection, and measures for EMC Directives.

A-1 Specifications A-2

A-2 Specifications of Basic I/O Units A-3

A-2-1 Overview of Units A-3
A-2-2 Basic I/O Units A-6
A-2-3 Precautions on Contact Output Units A-71
A-2-4 Connecting Connector-Terminal Block Conversion Units and I/O Relay Terminals A-74

A-3 Dimensions A-114

A-3-1 NJ-series CPU Units A-114
A-3-2 NJ-series Power Supply Units A-115
A-3-3 CJ-series Basic I/O Units A-116
A-3-4 B7A Interface Unit A-119
A-3-5 CJ-series I/O Control Unit and I/O Interface Unit A-119
A-3-6 SD Memory Card A-120

A-4 Load Short-circuit Protection and Line Disconnection Detection for CJ-series Basic I/O Units A-121

A-4-1 Load Short-circuit Protection and Line Disconnection Detection for CJ1W-OD202 ..... A-121
A-4-2 Load Short-circuit Protection for CJ1W-OD204/OD212/OD232/MD232 ..... A-124

A-5 EMC Directive Measures for Relay Outputs A-126

A-6 System-defined Variables Related to Hardware A-128

A-7 Version Information A-129

A-7-1 Relationship between Hardware Revisions of CPU Units and Sysmac Studio Versions A-129
A-7-2 Performance Improvements for Unit Version Upgrades A-129

A-1 Specifications

This section gives the specifications of the NJ-series CPU Units.

Item		NJ501-□□□□	NJ301-□□□□	NJ101-□□□□
Enclosure		Mounted in a panel		
Grounding method		Ground to less than 100 Ω.		
Dimensions (height × depth × width)		90 mm × 90 mm × 90 mm		
Weight		550 g (including the End Cover)		
Current consumption		5 VDC 1.90 A (including SD Memory Card and End Cover)		
Operating environment	**Ambient operating temperature**	0 to 55°C		
	Ambient operating humidity	10% to 90% (with no condensation)		
	Atmosphere	Must be free from corrosive gases.		
	Ambient storage temperature	−20 to 75°C (excluding battery)		
	Altitude	2,000 m max.		
	Pollution degree	2 or less: Meets IEC 61010-2-201.		
	Noise immunity	2 kV on power supply line (Conforms to IEC 61000-4-4.)		
	Overvoltage category	Category II: Meets IEC 61010-2-201.		
	EMC immunity level	Zone B		
	Vibration resistance	Conforms to IEC 60068-2-6. 5 to 8.4 Hz with 3.5-mm amplitude, 8.4 to 150 Hz, Acceleration of 9.8 m/s^2, 100 min in X, Y, and Z directions (10 sweeps of 10 min each = 100 min total) Gravity acceleration is assumed to be G=9.8m/s^2.		
	Shock resistance	Conforms to IEC 60068-2-27. 147 m/s^2, 3 times in X, Y, and Z directions (100 m/s^2 for Relay Output Units) Gravity acceleration is assumed to be G=9.8m/s^2.		
Battery	**Life**[*1]	5 years at 25°C		
	Model	CJ1W-BAT01		
Applicable standards[*2]		cULus, EU Directives, NK, LR and KC[*3]		

*1. This is the value when the power ON time rate is 0% (power OFF).

*2. Refer to the OMRON website (http://www.ia.omron.com) or contact your OMRON representative for the most recent applicable standards for each model.

*3. The KC complies with a CPU Unit with a unit version of 1.01 or later.

A-2 Specifications of Basic I/O Units

A-2-1 Overview of Units

Basic I/O Units

● Basic Input Units

Type of Unit	Name	Input specifications		Model	Page
Basic Input Units	DC Input Units	Terminal block, 12 to 24 VDC	8 inputs	CJ1W-ID201	page A-6
		Terminal block, 24 VDC	16 inputs	CJ1W-ID211	page A-8
				CJ1W-ID212	page A-10
		Fujitsu / OTAX connector, 24 VDC	32 inputs	CJ1W-ID231	page A-12
		MIL connector, 24 VDC	32 inputs	CJ1W-ID232	page A-14
				CJ1W-ID233	page A-16
		Fujitsu / OTAX connector, 24 VDC	64 inputs	CJ1W-ID261	page A-18
		MIL connector, 24 VDC	64 inputs	CJ1W-ID262	page A-20
	AC Input Units	Terminal block, 200 to 240 VAC	8 inputs	CJ1W-IA201	page A-22
		Terminal block, 100 to 120 VAC	16 inputs	CJ1W-IA111	page A-24
	Interrupt Input Unit	Terminal block, 24 VDC	16 inputs	CJ1W-INT01	page A-26
	Quick-response Input Unit	Terminal block, 24 VDC	16 inputs	CJ1W-IDP01	page A-28

Basic Output Units

Type of Unit	Name		Output specifications		Model	Page
Basic Output Units	Relay Output Units		Terminal block, 250 VAC/24 VDC, 2 A, 8 independent contacts	8 outputs	CJ1W-OC201	page A-30
			Terminal block, 250 VAC/24 VDC, 2 A	16 outputs	CJ1W-OC211	page A-32
	Triac Output Unit		Terminal block, 250 VAC/24 VDC, 0.6 A	8 outputs	CJ1W-OA201 CJ1W-OA201-1	page A-33
	Transistor Output Units	Sinking outputs	Terminal block, 12 to 24 VDC, 2 A	8 outputs	CJ1W-OD201	page A-35
			Terminal block, 12 to 24 VDC, 0.5 A	8 outputs	CJ1W-OD203	page A-37
			Terminal block, 12 to 24 VDC, 0.5 A	16 outputs	CJ1W-OD211	page A-38
			Terminal block, 24 VDC, 0.5 A	16 outputs	CJ1W-OD213	page A-39
			Fujitsu / OTAX connector, 12 to 24 VDC, 0.5 A	32 outputs	CJ1W-OD231	page A-40
			MIL connector, 12 to 24 VDC, 0.5 A	32 outputs	CJ1W-OD233	page A-42
			MIL connector, 24 VDC, 0.5 A	32 outputs	CJ1W-OD234	page A-44
			Fujitsu / OTAX connector, 12 to 24 VDC, 0.3 A	64 outputs	CJ1W-OD261	page A-46
			MIL connector, 12 to 24 VDC, 0.3 A	64 outputs	CJ1W-OD263	page A-48
		Sourcing outputs	Terminal block, 24 VDC, 2 A, load short-circuit protection, line disconnection detection	8 outputs	CJ1W-OD202	page A-50
			Terminal block, 24 VDC, 0.5 A, load short-circuit protection	8 outputs	CJ1W-OD204	page A-52
			Terminal block, 24 VDC, 0.5 A, load short-circuit protection	16 outputs	CJ1W-OD212	page A-53
			MIL connector, 24 VDC, 0.5 A, load short-circuit protection	32 outputs	CJ1W-OD232	page A-55
			MIL connector, 12 to 24 VDC, 0.3 A	64 outputs	CJ1W-OD262	page A-57

● Basic Mixed I/O Units

Type of Unit	Name		I/O specifications		Model	Page
Basic I/O Units	24-VDC Inputs/Transistor Output Units	Sinking output	Fujitsu / OTAX connector Inputs: 24 VDC Outputs: 12 to 24 VDC, 0.5 A	16 inputs 16 outputs	CJ1W-MD231	page A-59
			MIL connector Inputs: 24 VDC Outputs: 12 to 24 VDC, 0.5 A		CJ1W-MD233	page A-61
			Fujitsu / OTAX connector Inputs: 24 VDC Outputs: 12 to 24 VDC, 0.3 A	32 inputs 32 outputs	CJ1W-MD261	page A-63
			MIL connector Inputs: 24 VDC Outputs: 12 to 24 VDC, 0.3 A		CJ1W-MD263	page A-65
		Sourcing output	MIL connector Inputs: 24 VDC Outputs: 24 VDC, 0.5 A, load short-circuit protection	16 inputs 16 outputs	CJ1W-MD232	page A-67
	TTL I/O Units		Inputs: 5 VDC Outputs: 5 VDC, 35 mA	32 inputs 32 outputs	CJ1W-MD563	page A-69

Reading External Connection and Terminal-Device Variable Diagrams

- I/O terminals in the external connection and terminal-device variable diagrams are shown as viewed from the front panel of the Unit.
- Terminal numbers A0 to A9 and B0 to B9 are used in this manual, but they are not printed on all Units.
- A0 to A20 and B0 to B20 are printed on the Units.
- The signal names of the terminals are the device variable names. The device variable names are the names that use *Jxx* as the device name.

A-2-2 Basic I/O Units

Basic Input Units with Terminal Blocks

● CJ1W-ID201 DC Input Unit (12 to 24-VDC, 8 Points)

Name	8-point DC Input Unit with Terminal Block
Model	CJ1W-ID201
Rated Input Voltage	12 to 24 VDC
Allowable Input Voltage Range	10.2 to 26.4 VDC
Input Impedance	2.4 kΩ
Input Current	10 mA typical (at 24 VDC)
ON Voltage/ON Current	8.8 VDC min./3 mA min.
OFF Voltage/OFF Current	3 VDC max./1 mA max.
ON Response Time	8.0 ms max. (Can be set to between 0 and 32 ms in the Unit Information settings.)*1
OFF Response Time	8.0 ms max. (Can be set to between 0 and 32 ms in the Unit Information settings.)*1
Number of Circuits	8 independent contacts
Number of Simultaneously ON Points	100% simultaneously ON
Insulation Resistance	20 MΩ between external terminals and the GR terminal (100 VDC)
Dielectric Strength	1,000 VAC between the external terminals and the GR terminal for 1 minute at a leakage current of 10 mA max.
Internal Current Consumption	80 mA max.
Weight	110 g max.
Circuit Configuration	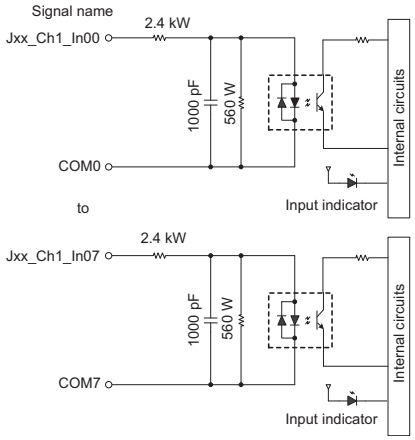

External connection and terminal-device variable diagram	*2 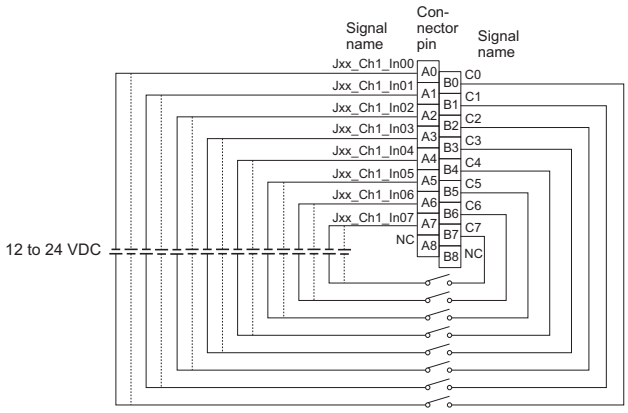 • Polarity of the input power supply can be connected in either direction.

*1. The ON response time will be 20 μs maximum and OFF response time will be 400 μs maximum even if the response time are set to 0 ms due to internal element delays.

*2. Terminal numbers A0 to A8 and B0 to B8 are used in the external connection and terminal-device variable diagrams. They are not printed on the Units.

● CJ1W-ID211 DC Input Unit (24 VDC, 16 Points)

Name	16-point DC Input Unit with Terminal Block
Model	CJ1W-ID211
Rated Input Voltage	24 VDC
Allowable Input Voltage Range	20.4 to 26.4 VDC
Input Impedance	3.3 kΩ
Input Current	7 mA typical (at 24 VDC)
ON Voltage/ON Current	14.4 VDC min./3 mA min.
OFF Voltage/OFF Current	5 VDC max./1 mA max.
ON Response Time	8.0 ms max. (Can be set to between 0 and 32 ms in the Unit Information settings.)*1
OFF Response Time	8.0 ms max. (Can be set to between 0 and 32 ms in the Unit Information settings.)*1
Number of Circuits	16 (16 points/common, 1 circuit)
Number of Simultaneously ON Points	100% simultaneously ON (at 24 VDC) (Refer to the following illustration.)
Insulation Resistance	20 MΩ between external terminals and the GR terminal (100 VDC)
Dielectric Strength	1,000 VAC between the external terminals and the GR terminal for 1 minute at a leakage current of 10 mA max.
Internal Current Consumption	80 mA max.
Weight	110 g max.
Circuit Configuration	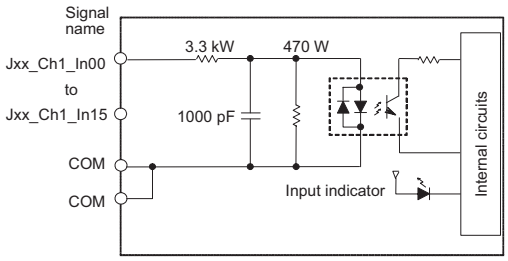 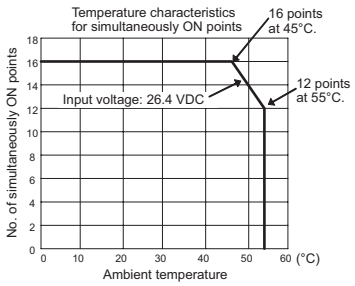

External connection and terminal-device variable diagram	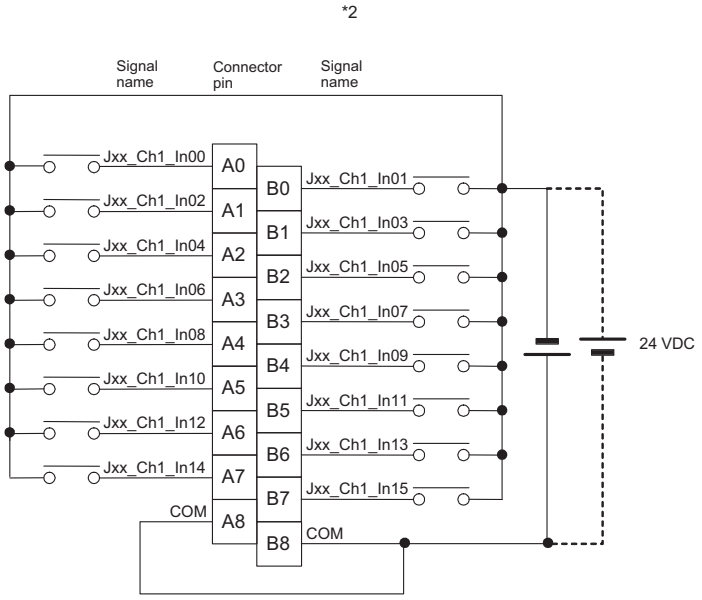 • Polarity of the input power supply can be connected in either direction.

*1. The ON response time will be 20 μs maximum and OFF response time will be 400 μs maximum even if the response time are set to 0 ms due to internal element delays.

*2. Terminal numbers A0 to A8 and B0 to B8 are used in the external connection and terminal-device variable diagrams. They are not printed on the Units.

● CJ1W-ID212 DC Input Unit (24 VDC, 16 Points)

Name	16-point DC Input Unit with Terminal Block
Model	CJ1W-ID212
Rated Input Voltage	24 VDC
Allowable Input Voltage Range	20.4 to 26.4 VDC
Input Impedance	3.3 kΩ
Input Current	7 mA typical (at 24 VDC)
ON Voltage/ON Current	14.4 VDC min./3 mA min.
OFF Voltage/OFF Current	5 VDC max./1 mA max.
ON Response Time	8.0 ms max. (Can be set to between 0 and 32 ms in the Unit Information settings.)*1
OFF Response Time	8.0 ms max. (Can be set to between 0 and 32 ms in the Unit Information settings.)*1
Number of Circuits	16 (16 points/common, 1 circuit)
Number of Simultaneously ON Points	100% simultaneously ON (at 24 VDC) (Refer to the following illustration.)
Insulation Resistance	20 MΩ between external terminals and the GR terminal (100 VDC)
Dielectric Strength	1,000 VAC between the external terminals and the GR terminal for 1 minute at a leakage current of 10 mA max.
Internal Current Consumption	130 mA max.
Weight	110 g max.
Circuit Configuration	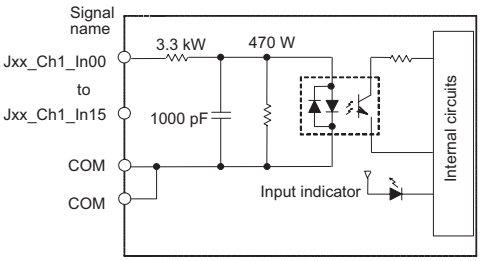 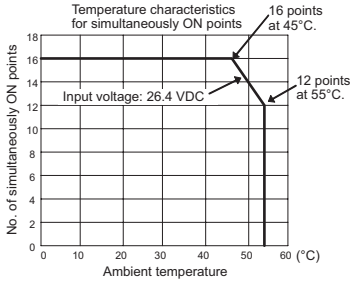

External connection and terminal-device variable diagram	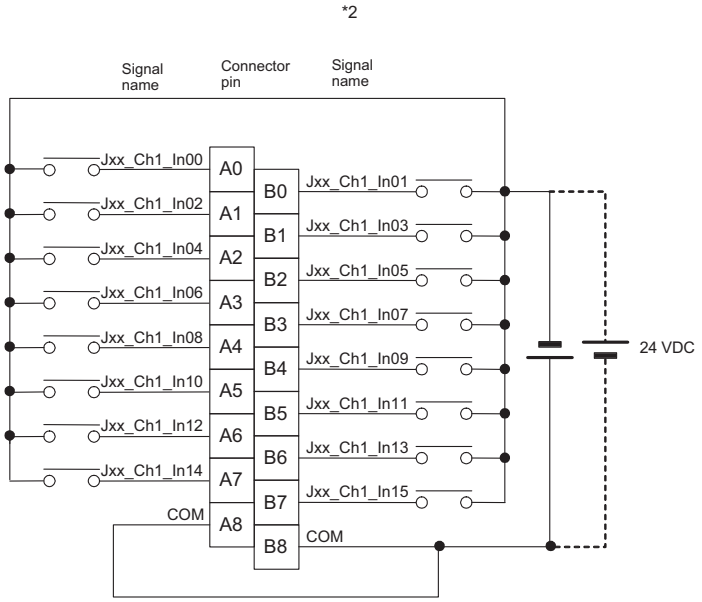 • Polarity of the input power supply can be connected in either direction.

*1. The ON response time will be 15 μs maximum and OFF response time will be 90 μs maximum even if the response time are set to 0 ms due to internal element delays.

*2. Terminal numbers A0 to A8 and B0 to B8 are used in the external connection and terminal-device variable diagrams. They are not printed on the Units.

● CJ1W-ID231 DC Input Unit (24 VDC, 32 Points)

Name	32-point DC Input Unit with Fujitsu / OTAX Connector
Model	CJ1W-ID231
Rated Input Voltage	24 VDC
Allowable Input Voltage Range	20.4 to 26.4 VDC
Input Impedance	5.6 kΩ
Input Current	4.1 mA typical (at 24 VDC)
ON Voltage/ON Current	19.0 VDC min./3 mA min.
OFF Voltage/OFF Current	5 VDC max./1 mA max.
ON Response Time	8.0 ms max. (Can be set to between 0 and 32 ms in the Unit Information settings.)*1
OFF Response Time	8.0 ms max. (Can be set to between 0 and 32 ms in the Unit Information settings.)*1
Number of Circuits	32 (16 points/common, 2 circuits)
Number of Simultaneously ON Points	75% (12 points/common) simultaneously ON (at 24 VDC) (Refer to the following illustration.)
Insulation Resistance	20 MΩ between external terminals and the GR terminal (100 VDC)
Dielectric Strength	1,000 VAC between the external terminals and the GR terminal for 1 minute at a leakage current of 10 mA max.
Internal Current Consumption	90 mA max.
Weight	70 g max.
Accessories	None
Circuit Configuration	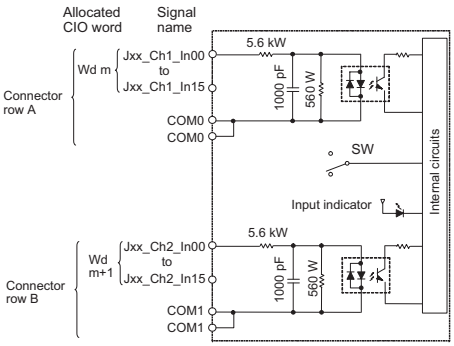 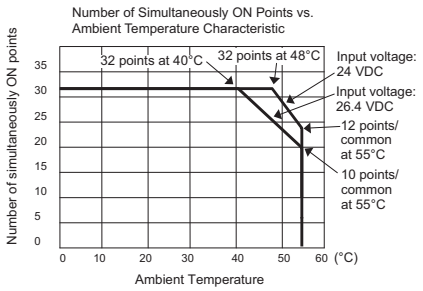

External connection and terminal-device variable diagram	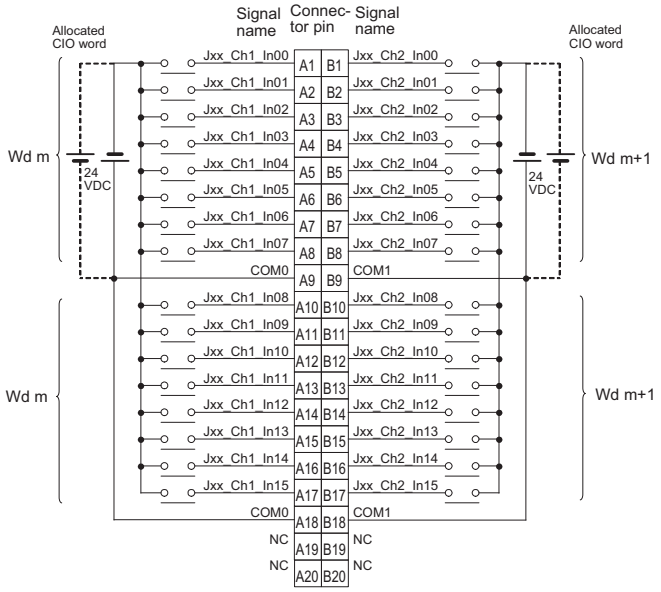 • The input power polarity can be connected in either direction. • Be sure to wire both pins A9 and A18 (COM0), and set the same polarity for both pins. • Be sure to wire both pins B9 and B18 (COM1), and set the same polarity for both pins.

*1. The ON response time will be 20 μs maximum and OFF response time will be 400 μs maximum even if the response times are set to 0 ms due to internal element delays.

Note Observe the following restrictions when connecting to a 2-wire sensor.

- Make sure the input power supply voltage is larger than the ON voltage (19 V) plus the residual voltage of the sensor (approx. 3 V).
- Use a sensor with a minimum load current of 3 mA min.
- Connect bleeder resistance if you connect a sensor with a minimum load current of 5 mA or higher.

● CJ1W-ID232 DC Input Unit (24 VDC, 32 Points)

Name	32-point DC Input Unit with MIL Connector
Model	CJ1W-ID232
Rated Input Voltage	24 VDC
Allowable Input Voltage Range	20.4 to 26.4 VDC
Input Impedance	5.6 kΩ
Input Current	4.1 mA typical (at 24 VDC)
ON Voltage/ON Current	19.0 VDC min./3 mA min.
OFF Voltage/OFF Current	5 VDC max./1 mA max.
ON Response Time	8.0 ms max. (Can be set to between 0 and 32 ms in the Unit Information settings.)*1
OFF Response Time	8.0 ms max. (Can be set to between 0 and 32 ms in the Unit Information settings.)*1
Number of Circuits	32 (16 points/common, 2 circuits)
Number of Simultaneously ON Points	75% (12 points/common) simultaneously ON (at 24 VDC) (Refer to the following illustration.)
Insulation Resistance	20 MΩ between external terminals and the GR terminal (100 VDC)
Dielectric Strength	1,000 VAC between the external terminals and the GR terminal for 1 minute at a leakage current of 10 mA max.
Internal Current Consumption	90 mA max.
Weight	70 g max.
Accessories	None
Circuit Configuration	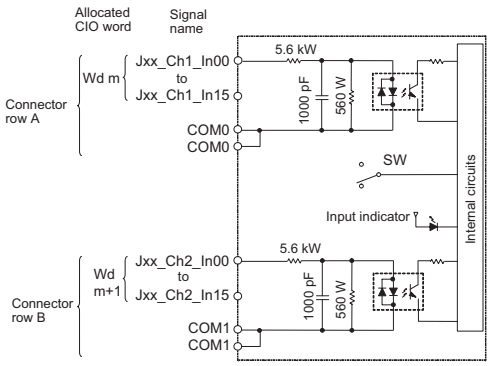 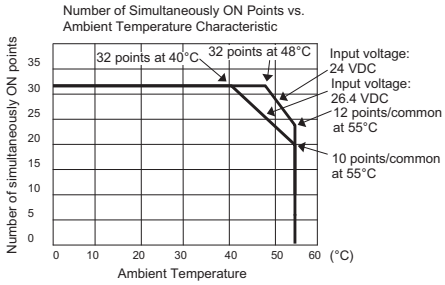

External connection and terminal-device variable diagram	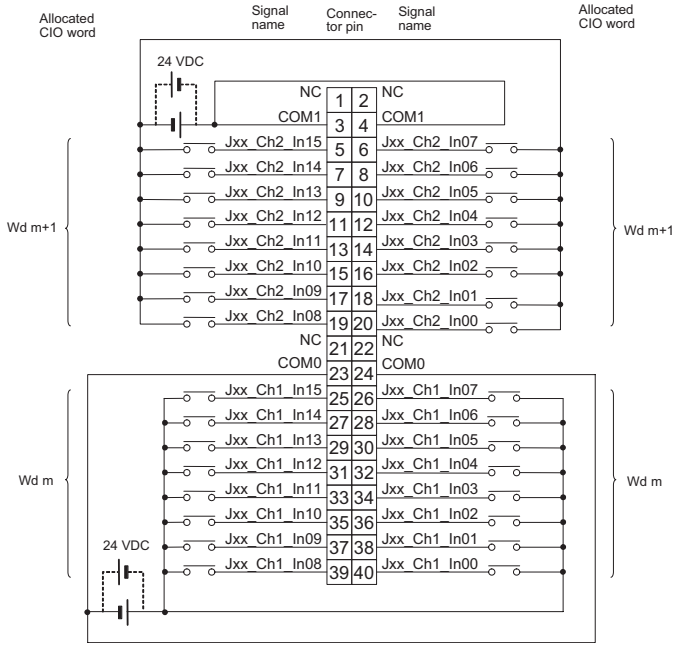 • The input power polarity can be connected in either direction. • Be sure to wire both pins 23 and 24 (COM0), and set the same polarity for both pins. • Be sure to wire both pins 3 and 4 (COM1), and set the same polarity for both pins.

*1. The ON response time will be 20 μs maximum and OFF response time will be 400 μs maximum even if the response times are set to 0 ms due to internal element delays.

Note Observe the following restrictions when connecting to a 2-wire sensor.

- Make sure the input power supply voltage is larger than the ON voltage (19 V) plus the residual voltage of the sensor (approx. 3 V).
- Use a sensor with a minimum load current of 3 mA min.
- Connect bleeder resistance if you connect a sensor with a minimum load current of 5 mA or higher.

● CJ1W-ID233 DC Input Unit (24 VDC, 32 Points)

Name	32-point DC Input Unit with MIL Connector
Model	CJ1W-ID233
Rated Input Voltage	24 VDC
Allowable Input Voltage Range	20.4 to 26.4 VDC
Input Impedance	5.6 kΩ
Input Current	4.1 mA typical (at 24 VDC)
ON Voltage/ON Current	19.0 VDC min./3 mA min.
OFF Voltage/OFF Current	5 VDC max./1 mA max.
ON Response Time	8.0 ms max. (Can be set to between 0 and 32 ms in the Unit Information settings.)*1
OFF Response Time	8.0 ms max. (Can be set to between 0 and 32 ms in the Unit Information settings.)*1
Number of Circuits	32 (16 points/common, 2 circuits)
Number of Simultaneously ON Points	75% (12 points/common) simultaneously ON (at 24 VDC) (Refer to the following illustration.)
Insulation Resistance	20 MΩ between external terminals and the GR terminal (100 VDC)
Dielectric Strength	1,000 VAC between the external terminals and the GR terminal for 1 minute at a leakage current of 10 mA max.
Internal Current Consumption	200 mA max.
Weight	70 g max.
Accessories	None
Circuit Configuration	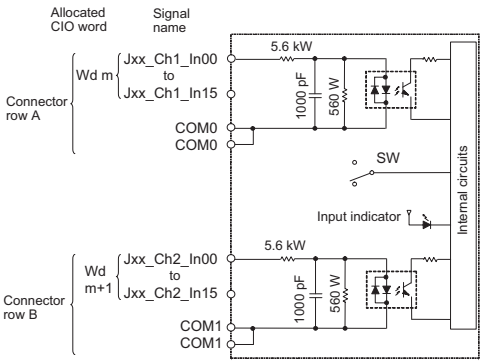 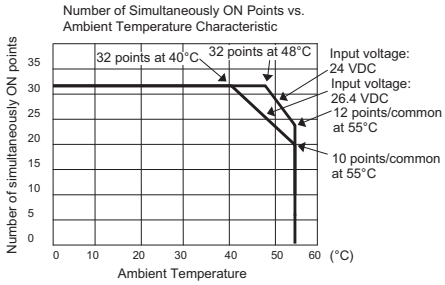

External connection and terminal-device variable diagram	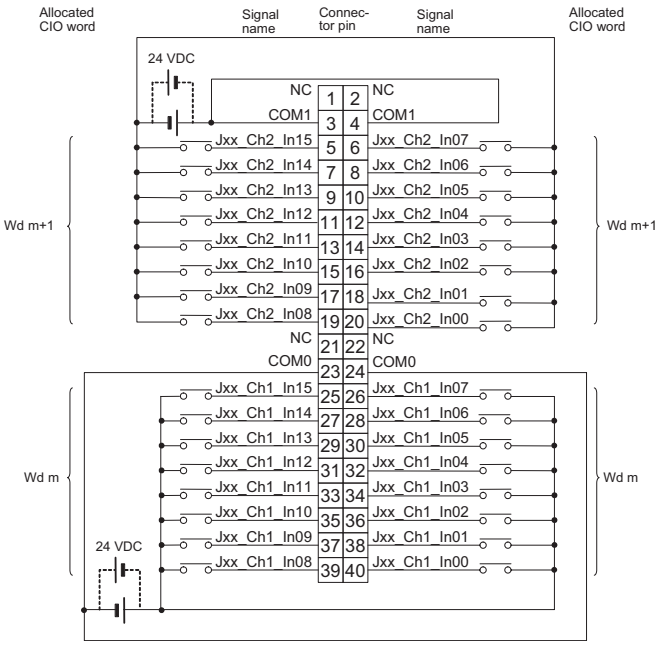 • The input power polarity can be connected in either direction. • Be sure to wire both pins 23 and 24 (COM0), and set the same polarity for both pins. • Be sure to wire both pins 3 and 4 (COM1), and set the same polarity for both pins.

*1. The ON response time will be 15 μs maximum and OFF response time will be 90 μs maximum even if the response times are set to 0 ms due to internal element delays.

Note Observe the following restrictions when connecting to a 2-wire sensor.

- Make sure the input power supply voltage is larger than the ON voltage (19 V) plus the residual voltage of the sensor (approx. 3 V).
- Use a sensor with a minimum load current of 3 mA min.
- Connect bleeder resistance if you connect a sensor with a minimum load current of 5 mA or higher.

● CJ1W-ID261 DC Input Unit (24 VDC, 64 Points)

Name	64-point DC Input Unit with Fujitsu / OTAX Connector
Model	CJ1W-ID261
Rated Input Voltage	24 VDC
Allowable Input Voltage Range	20.4 to 26.4 VDC
Input Impedance	5.6 kΩ
Input Current	4.1 mA typical (at 24 VDC)
ON Voltage/ON Current	19.0 VDC min./3 mA min.
OFF Voltage/OFF Current	5 VDC max./1 mA max.
ON Response Time	8.0 ms max. (Can be set to between 0 and 32 ms in the Unit Information settings.)*1
OFF Response Time	8.0 ms max. (Can be set to between 0 and 32 ms in the Unit Information settings.)*1
Number of Circuits	64 (16 points/common, 4 circuits)
Number of Simultaneously ON Points	50% (16 points/common) simultaneously ON (at 24 VDC) (Refer to the following illustrations.)
Insulation Resistance	20 MΩ between external terminals and the GR terminal (100 VDC)
Dielectric Strength	1,000 VAC between the external terminals and the GR terminal for 1 minute at a leakage current of 10 mA max.
Internal Current Consumption	90 mA max.
Weight	110 g max.
Accessories	None
Circuit Configuration	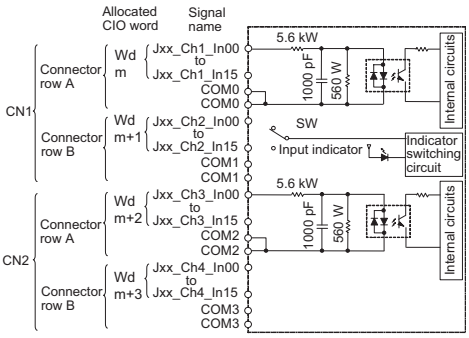 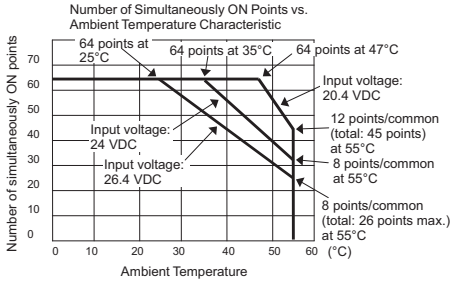

External connection and terminal-device variable diagram	CN1	CN2
	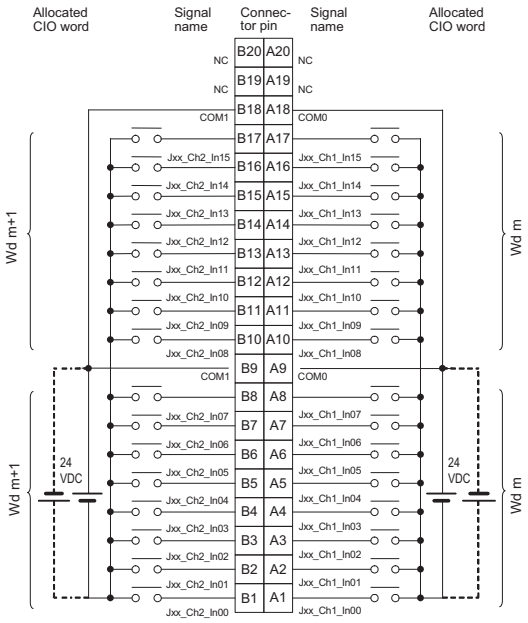 • The input power polarity can be connected in either direction. • Be sure to wire both pins A9 and A18 (COM0) of CN1, and set the same polarity for both pins. • Be sure to wire both pins B9 and B18 (COM1) of CN1.	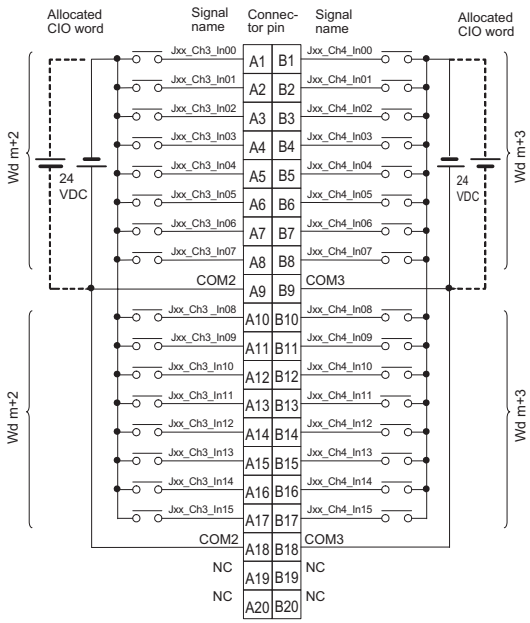 • The input power polarity can be connected in either direction. • Be sure to wire both pins A9 and A18 (COM2) of CN2, and set the same polarity for both pins. • Be sure to wire both pins B9 and B18 (COM3) of CN2, and set the same polarity for both pins.

*1. The ON response time will be 120 μs maximum and OFF response time will be 400 μs maximum even if the response times are set to 0 ms due to internal element delays.

Note Observe the following restrictions when connecting to a 2-wire sensor.

- Make sure the input power supply voltage is larger than the ON voltage (19 V) plus the residual voltage of the sensor (approx. 3 V).
- Use a sensor with a minimum load current of 3 mA min.
- Connect bleeder resistance if you connect a sensor with a minimum load current of 5 mA or higher.

● CJ1W-ID262 DC Input Unit (24 VDC, 64 Points)

Name	64-point DC Input Unit with MIL Connector
Model	CJ1W-ID262
Rated Input Voltage	24 VDC
Allowable Input Voltage Range	20.4 to 26.4 VDC
Input Impedance	5.6 kΩ
Input Current	4.1 mA typical (at 24 VDC)
ON Voltage/ON Current	19.0 VDC min./3 mA min.
OFF Voltage/OFF Current	5 VDC max./1 mA max.
ON Response Time	8.0 ms max. (Can be set to between 0 and 32 ms in the Unit Information settings.)*1
OFF Response Time	8.0 ms max. (Can be set to between 0 and 32 ms in the Unit Information settings.)*1
Number of Circuits	64 (16 points/common, 4 circuits)
Number of Simultaneously ON Points	50% (8 points/common) simultaneously ON (at 24 VDC) (Refer to the following illustrations.)
Insulation Resistance	20 MΩ between external terminals and the GR terminal (100 VDC)
Dielectric Strength	1,000 VAC between the external terminals and the GR terminal for 1 minute at a leakage current of 10 mA max.
Internal Current Consumption	90 mA max.
Weight	110 g max.
Accessories	None
Circuit Configuration	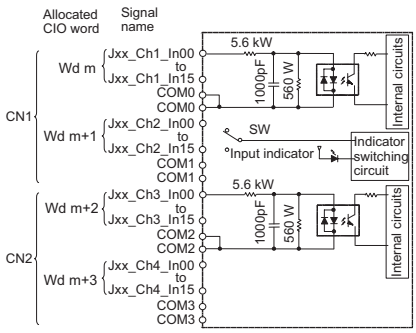 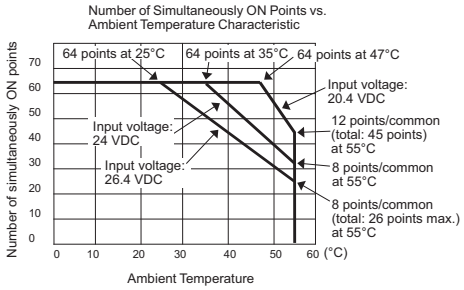

External connection and terminal-device variable diagram	CN1	CN2
	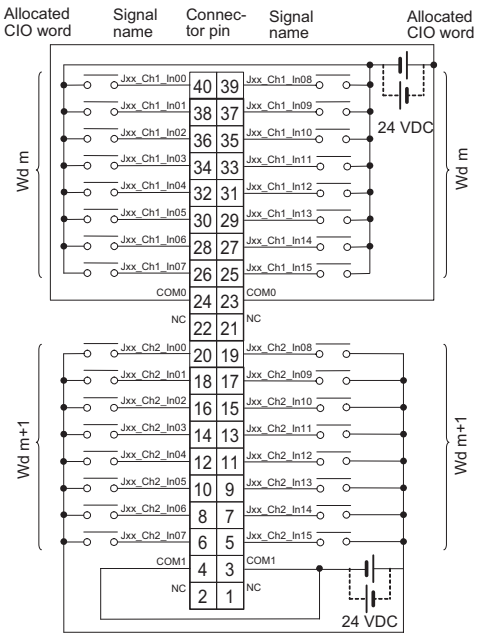 • The input power polarity can be connected in either direction. • Be sure to wire both pins 23 and 24 (COM0) of CN1, and set the same polarity for both pins. • Be sure to wire both pins 3 and 4 (COM1) of CN1, and set the same polarity for both pins.	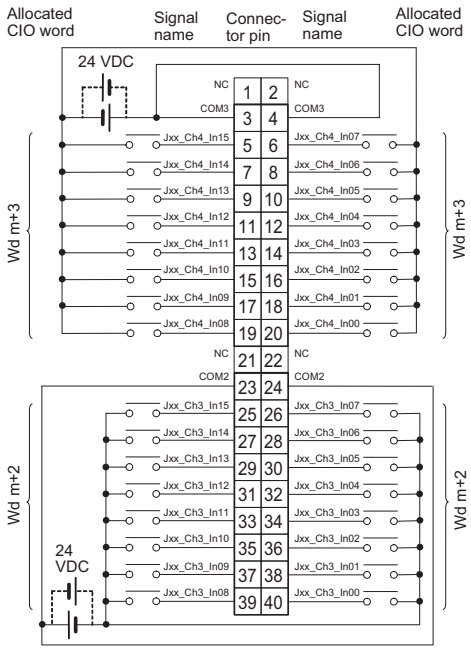 • The input power polarity can be connected in either direction. • Be sure to wire both pins 23 and 24 (COM2) of CN2, and set the same polarity for both pins. • Be sure to wire both pins 3 and 4 (COM3) of CN2, and set the same polarity for both pins.

*1. The ON response time will be 120 μs maximum and OFF response time will be 400 μs maximum even if the response times are set to 0 ms due to internal element delays.

Note Observe the following restrictions when connecting to a 2-wire sensor.

- Make sure the input power supply voltage is larger than the ON voltage (19 V) plus the residual voltage of the sensor (approx. 3 V).
- Use a sensor with a minimum load current of 3 mA min.
- Connect bleeder resistance if you connect a sensor with a minimum load current of 5 mA or higher.

● CJ1W-IA201 AC Input Unit (200 VAC, 8 Points)

Name	8-point AC Input Unit with Terminal Block
Model	CJ1W-IA201
Rated Input Voltage	200 to 240 VAC 50/60 Hz
Allowable Input Voltage Range	170 to 264 VAC
Input Impedance	21 kΩ (50 Hz), 18 kΩ (60 Hz)
Input Current	9 mA typical (at 200 VAC, 50 Hz), 11 mA typical (at 200 VAC, 60 Hz)
ON Voltage/ON Current	120 VAC min./4 mA min.
OFF Voltage/OFF Current	40 VAC max./2 mA max.
ON Response Time	18.0 ms max. (Default setting in Unit Information: 8 ms)*1
OFF Response Time	48.0 ms max. (Default setting in Unit Information: 8 ms)*1
Number of Circuits	8 (8 points/common, 1 circuit)
Number of Simultaneously ON Points	100% (8 points/common) simultaneously ON
Insulation Resistance	20 MΩ between external terminals and the GR terminal (500 VDC)
Dielectric Strength	2,000 VAC between the external terminals and the GR terminal for 1 minute at a leakage current of 10 mA max.
Internal Current Consumption	80 mA max.
Weight	130 g max.
Accessories	None
Circuit Configuration	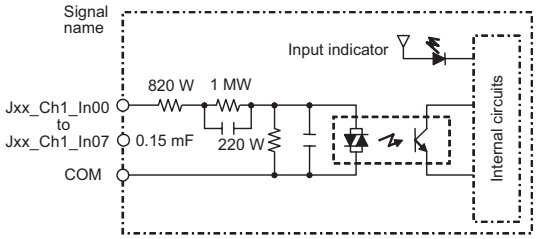
Terminal Connections	*2 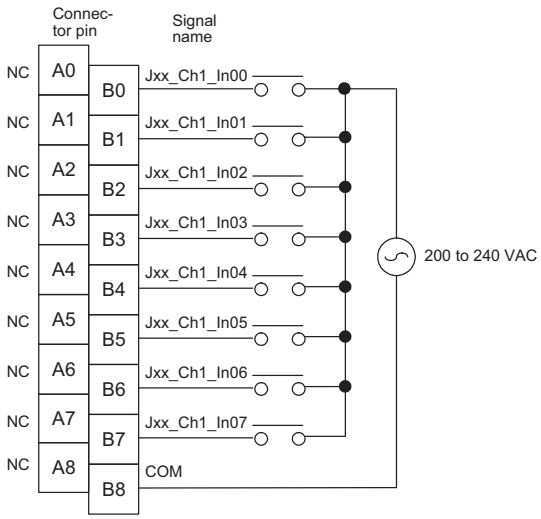

*1. Can be set to 0 ms, 0.5 ms, 1 ms, 2 ms, 4 ms, 8 ms, 16 ms, or 32ms in the Unit Information settings. When the response times have been set to 0 ms, the ON response time will be 10 ms maximum and the OFF response time will be 40 ms maximum due to internal element delays.

*2. Terminal numbers A0 to A8 and B0 to B8 are used in the external connection and terminal-device variable diagrams. They are not printed on the Units.

● CJ1W-IA111 AC Input Unit (100 VAC, 16 points)

Name	16-point AC Input Unit with Terminal Block
Model	CJ1W-IA111
Rated Input Voltage	100 to 120 VAC 50/60 Hz*2
Allowable Input Voltage Range	85 to 132 VAC
Input Impedance	14.5 kΩ (50 Hz), 12 kΩ (60 Hz)
Input Current	7 mA typical (at 100 VAC, 50 Hz), 8 mA typical (at 100 VAC, 60 Hz)
ON Voltage/ON Current	70 VAC min./4 mA min
OFF Voltage/OFF Current	20 VAC max./2 mA max
ON Response Time	18.0 ms max. (Default setting in Unit Information: 8 ms)*1
OFF Response Time	48.0 ms max. (Default setting in Unit Information: 8 ms)*1
Number of Circuits	16 (16 points/common, 1 circuit)
Number of Inputs ON Simultaneously	100% simultaneously ON (16 points/common)
Insulation Resistance	20 MΩ between external terminals and the GR terminal (500 VDC)
Dielectric Strength	2,000 VAC between the external terminals and the GR terminal for 1 minute at a leakage current of 10 mA max.
Internal Current Consumption	90 mA max.
Weight	130 g max.
Accessories	None
Circuit Layout	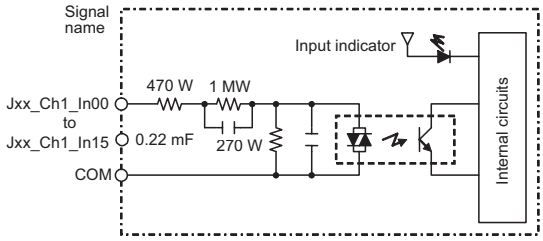
External connection and terminal-device variable diagram	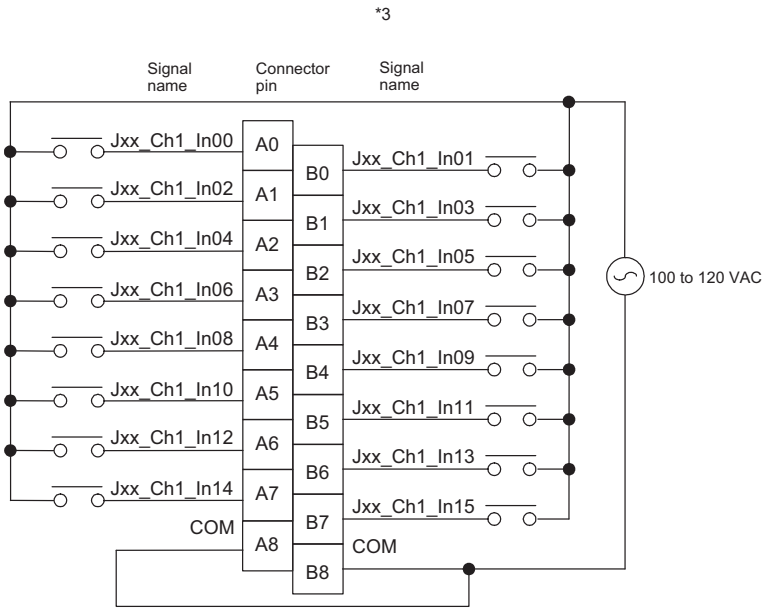

*1. Can be set to 0 ms, 0.5 ms, 1 ms, 2 ms, 4 ms, 8 ms, 16 ms, or 32ms in the Unit Information settings. When the response times have been set to 0 ms, the ON response time will be 10 ms maximum and the OFF response time will be 40 ms maximum due to internal element delays.

*2. Use an input voltage of 90 VAC or higher when connecting 2-wire sensors.
*3. Terminal numbers A0 to A8 and B0 to B8 are used in the external connection and terminal-device variable diagrams. They are not printed on the Units.

● CJ1W-INT01 Interrupt Input Unit (16 Points)

Name	16-point Interrupt Input Unit with Terminal Block
Model	CJ1W-INT01
Rated Input Voltage	24 VDC
Allowable Input Voltage Range	20.4 to 26.4 VDC
Input Impedance	3.3 kΩ
Input Current	7 mA typical (at 24 VDC)
ON Voltage/ON Current	14.4 VDC min./3 mA min.
OFF Voltage/OFF Current	5 VDC max./1 mA max.
ON Response Time	0.05 ms max.
OFF Response Time	0.5 ms max.
Number of Circuits	16 (16 points/common, 1 circuit)
Number of Simultaneously ON Points	100% (16 points/common) simultaneously ON (24 VDC)
Insulation Resistance	20 MΩ between external terminals and GR terminal (at 100 VDC)
Dielectric Strength	1,000 VAC between external terminals and GR terminal for 1 minute at a leakage current of 10 mA max.
Internal Current Consumption	80 mA max.
Weight	110 g max.
Accessories	None
Circuit Configuration	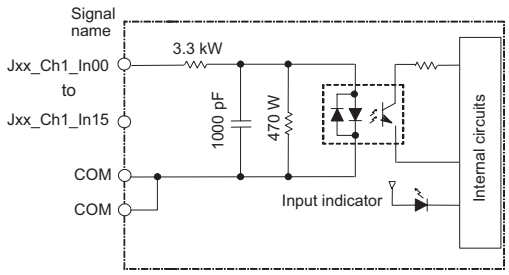 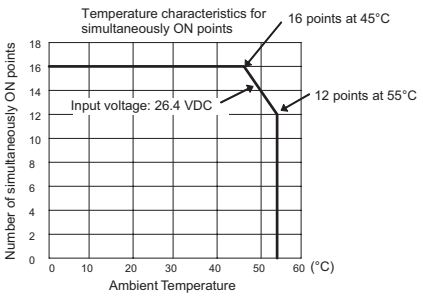 • Up to two Interrupt Input Units can be mounted to the CPU Rack. They must be connected as one of the five Units immediately next to the CPU Unit. If an Interrupt Input Unit is connected in any other position, an Incorrect Unit/Expansion Rack Connection error will occur. • Set the pulse width of signals input to the Interrupt Input Unit so they satisfy the following conditions. 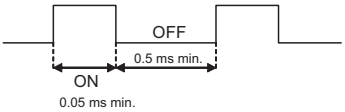

External connection and terminal-device variable diagram	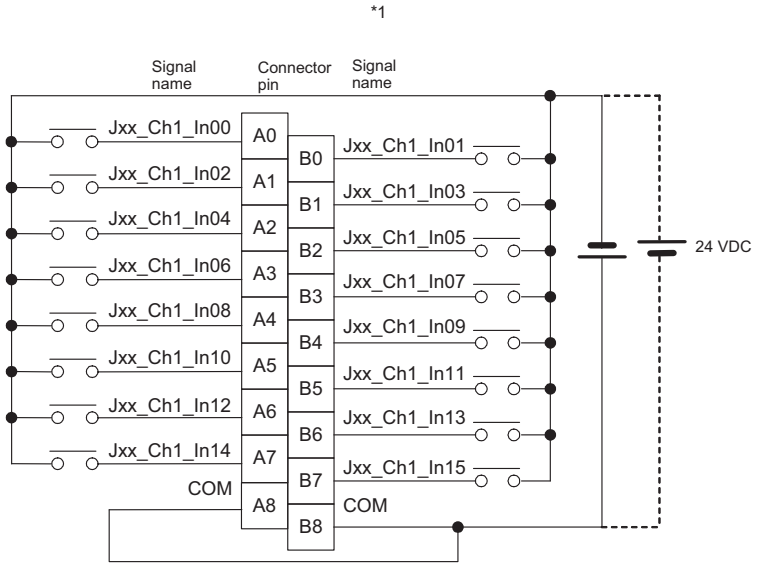 • The polarity can be connected in either direction.

*1. Terminal numbers A0 to A8 and B0 to B8 are used in the external connection and terminal-device variable diagrams. They are not printed on the Units.

Note Interrupt Input Units can be used as normal Basic I/O Units. They cannot be used to start I/O interrupt tasks.

● CJ1W-IDP01 Quick-response Input Unit (16 Points)

Name	16-point Quick-response Input Unit with Terminal Block
Model	CJ1W-IDP01
Rated Input Voltage	24 VDC
Allowable Input Voltage Range	20.4 to 26.4 VDC
Input Impedance	3.3 kΩ
Input Current	7 mA typical (at 24 VDC)
ON Voltage/ON Current	14.4 VDC min./3 mA min.
OFF Voltage/OFF Current	5 VDC max./1 mA max.
ON Response Time	0.05 ms max.
OFF Response Time	0.5 ms max.
Number of Circuits	16 (16 points/common, 1 circuit)
Number of Simultaneously ON Points	100% (16 points/common) simultaneously ON (24 VDC)
Insulation Resistance	20 MΩ between external terminals and GR terminal (at 100 VDC)
Dielectric Strength	1,000 VAC between external terminals and GR terminal for 1 minute at a leakage current of 10 mA max.
Internal Current Consumption	80 mA max.
Weight	110 g max.
Accessories	None
Circuit Configuration	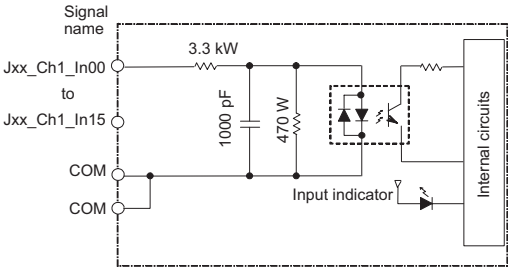 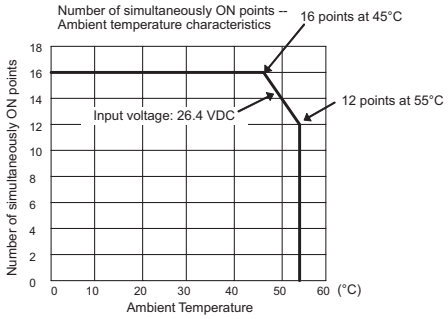
External connection and terminal-device variable diagram	*1 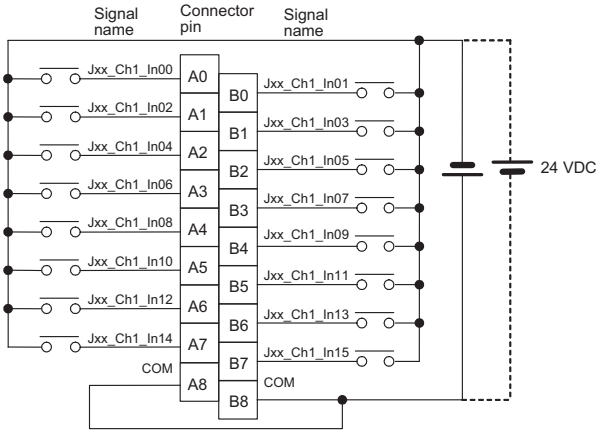 • The input power supply polarity can be connected in either direction.

*1. Terminal numbers A0 to A8 and B0 to B8 are used in the external connection and terminal-device variable diagrams. They are not printed on the Units.

• With quick-response inputs, pulse inputs shorter than the CPU Unit's cycle time can be read by the CPU Unit.

- The pulse width (ON time) that can be read by the Quick-response Input Unit is 0.05 ms.
- Inputs read by the internal circuits are cleared when inputs are refreshed.

Basic Output Units

● CJ1W-OC201 Contact Output Unit (Independent Relays, 8 Points)

Name	8-point Contact Output Unit with Terminal Block (Independent Relays)
Model	CJ1W-OC201
Max. Switching Capacity	2 A 250 VAC (cosφ = 1), 2 A 250 VAC (cosφ = 0.4), 2 A 24 VDC (16 A/Unit)
Min. Switching Capacity	1 mA 5 VDC
Relays	NY-24W-K-IE (Fujitsu Takamizawa Components, Ltd.), Cannot be replaced.
Service Life of Relay	Electrical: 150,000 operations (24 VDC, resistive load)/100,000 operations (240 VAC, cosφ = 0.4, inductive load) Mechanical: 20,000,000 operations Service life will vary depending on the connected load. Refer to page A-71 for information on service life according to the load.
ON Response Time	15 ms max.
OFF Response Time	15 ms max.
Number of Circuits	8 independent contacts
Insulation Resistance	20 MΩ between external terminals and the GR terminal (500 VDC)
Dielectric Strength	2,000 VAC between the external terminals and the GR terminal for 1 minute at a leakage current of 10 mA max.
Internal Current Consumption	90 mA 5 VDC max. 48 mA 24 VDC max. (6 mA × No. of ON points)
Weight	140 g max.
Circuit Configuration	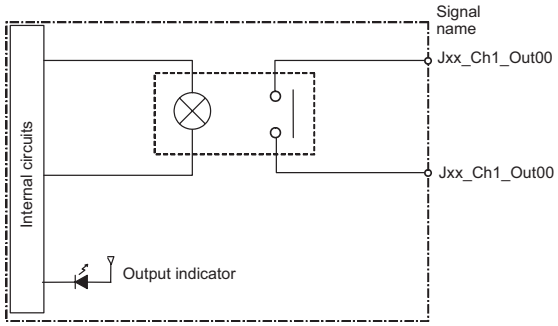

External connection and terminal-device variable diagram	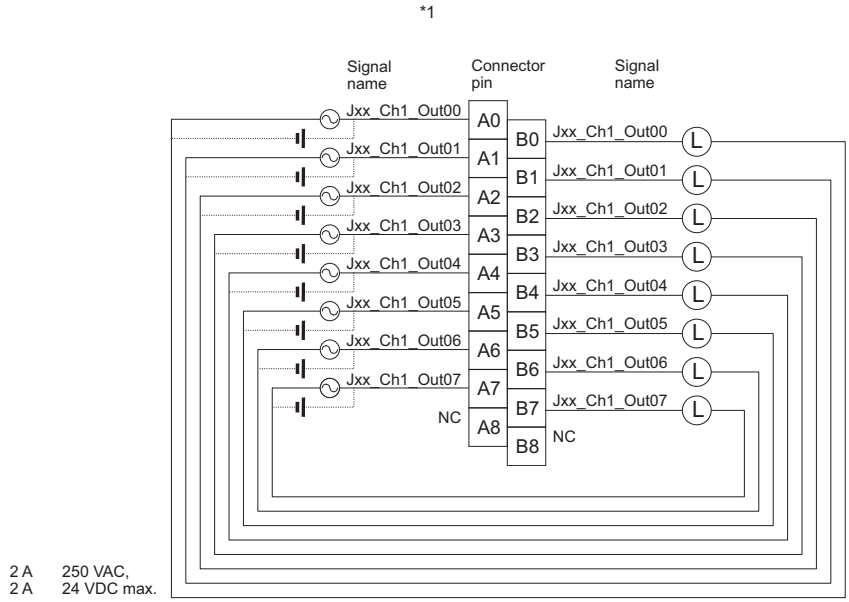 **Note** The input power supply polarity can be connected in either direction.

*1. Terminal numbers A0 to A8 and B0 to B8 are used in the external connection and terminal-device variable diagrams. They are not printed on the Units.

● CJ1W-OC211 Contact Output Unit (16 Points)

Name	16-point Contact Output Unit with Terminal Block
Model	CJ1W-OC211
Max. Switching Capacity	2 A 250 VAC (cosφ = 1), 2 A 250 VAC (cosφ = 0.4), 2 A 24 VDC 8 A/Unit
Min. Switching Capacity	1 mA 5 VDC
Relays	NY-24W-K-IE (Fujitsu Takamizawa Components, Ltd.), Cannot be replaced.
Service Life of Relay	Electrical: 150,000 operations (24 VDC, resistive load)/ 100,000 operations (240 VAC, cosφ = 0.4, inductive load) Mechanical: 20,000,000 operations Service life will vary depending on the connected load. Refer to page A-71 for information on service life according to the load.
ON Response Time	15 ms max.
OFF Response Time	15 ms max.
Number of Circuits	16 points/common, 1 circuit
Insulation Resistance	20 MΩ between external terminals and the GR terminal (500 VDC)
Dielectric Strength	2,000 VAC between the external terminals and the GR terminal for 1 minute at a leakage current of 10 mA max.
Internal Current Consumption	110 mA 5 VDC max. 96 mA 24 VDC max. (6 mA × No. of ON points)
Weight	170 g max.
Circuit Configuration	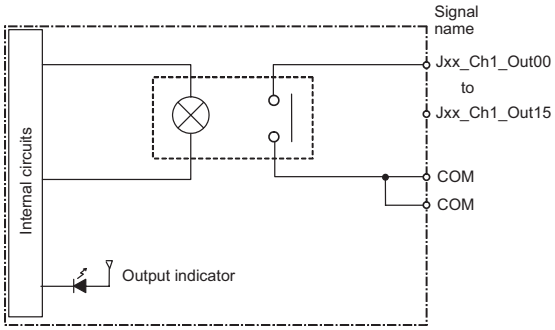
External connection and terminal-device variable diagram	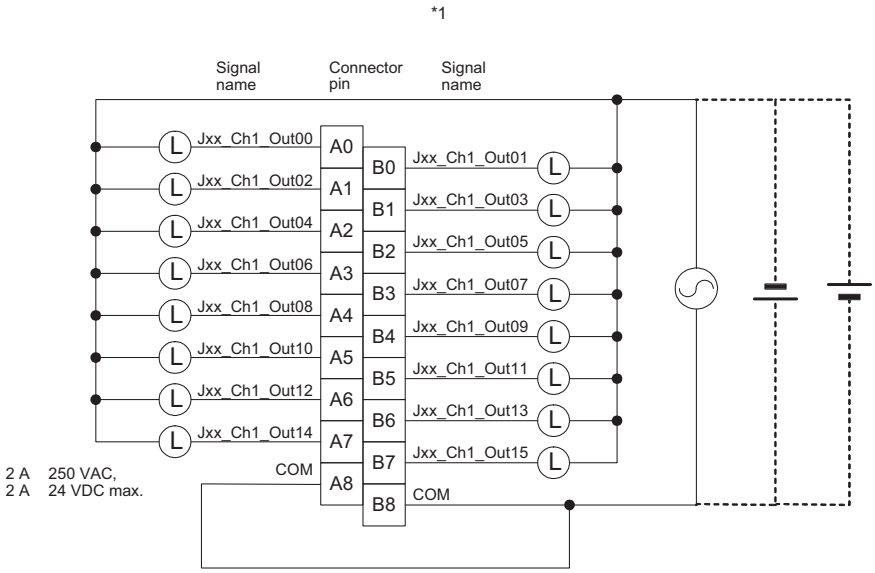

*1. Terminal numbers A0 to A8 and B0 to B8 are used in the external connection and terminal-device variable diagrams. They are not printed on the Units.

● CJ1W-OA201/OA201-1 Triac Output Unit (8 Points)

Name	8-point Triac Output Unit with Terminal Block
Model	CJ1W-OA201/OA201-1
Max. Switching Capacity	0.6 A 250 VAC, 50/60 Hz (2.4 A/Unit)
Max. Inrush Current	15 A (pulse width: 10 ms max.)
Min. Switching Capacity	50 mA 75 VAC
Leakage Current	1.5 mA (200 VAC) max.
Residual Voltage	1.6 VAC max.
ON Response Time	1 ms max.
OFF Response Time	1/2 of load frequency + 1 ms or less.
Number of Circuits	8 (8 points/common, 1 circuit)
Surge Protector	C.R Absorber + Surge Absorber
Fuses	5 A (1/common, 1 used) The fuse cannot be replaced by the user.
Insulation Resistance	20 MΩ between the external terminals and the GR terminal (500 VDC)
Dielectric Strength	2,000 VAC between the external terminals and the GR terminal for 1 minute at a leakage current of 10 mA max.
Internal Current Consumption	220 mA max.
Weight	150 g max.
Circuit Configuration	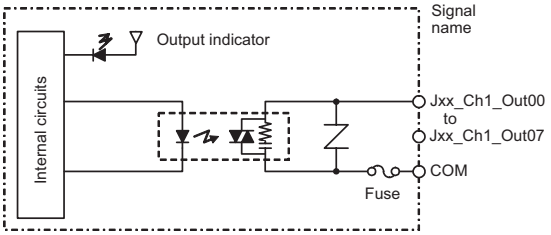
External connection and terminal-device variable diagram	*1 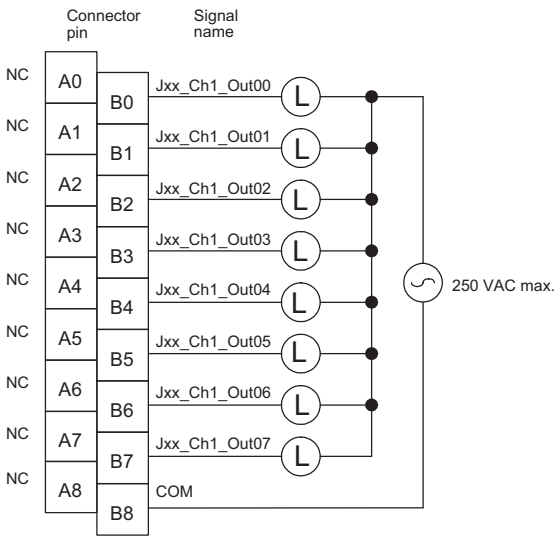

*1. Terminal numbers A0 to A8 and B0 to B8 are used in the external connection and terminal-device variable diagrams. They are not printed on the Units.

Note 1. The CJ1W-OA201 is a UL-uncertified product. (Models without the UL mark after March 2025)

Note 2. The CJ1W-OA201-1 is a UL-certified product.
The UL rating is as described below.
- 0.5 A 240 VAC (2 A/Unit) (GEN.) (LRA.)

- 0.15 A 240 VAC (0.6 A/Unit) (FLA.)

● CJ1W-OD201 Transistor Output Unit (8 Points)

Name	8-point Transistor Output Unit with Terminal Block (Sinking Outputs)
Model	CJ1W-OD201
Rated Voltage	12 to 24 VDC
Operating Load Voltage Range	10.2 to 26.4 VDC
Maximum Load Current	2.0 A/point, 8.0 A/Unit
Maximum Inrush Current	10 A/point, 10 ms max.
Leakage Current	0.1 mA max.
Residual Voltage	1.5 V max.
ON Response Time	0.5 ms max.
OFF Response Time	1.0 ms max.
Insulation Resistance	20 MΩ between the external terminals and the GR terminal (100 VDC)
Dielectric Strength	1,000 VAC between the external terminals and the GR terminal for 1 minute at a leakage current of 10 mA max.
Number of Circuits	8 (4 points/common, 2 circuits)
Internal Current Consumption	90 mA max.
Fuse	6.3 A (1/common, 2 used) The fuse cannot be replaced by the user.
External Power Supply	12 to 24 VDC, 10 mA min.
Weight	110 g max.
Circuit Configuration	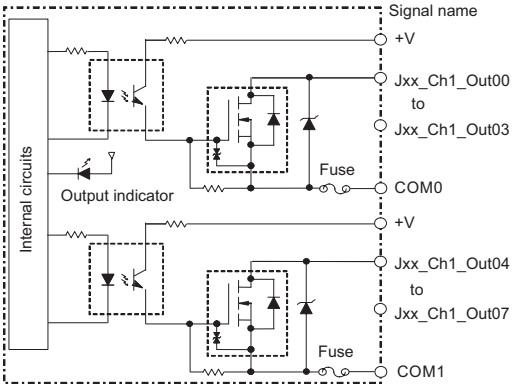

External connection and terminal-device variable diagram	*1 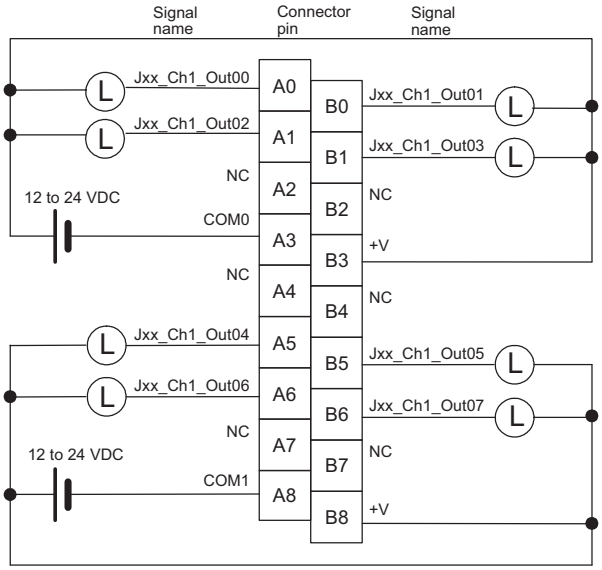 • When wiring, pay careful attention to the polarity of the external power supply. The load may operate incorrectly if the polarity is reversed.

*1. Terminal numbers A0 to A8 and B0 to B8 are used in the external connection and terminal-device variable diagrams. They are not printed on the Units.

● CJ1W-OD203 Transistor Output Unit (8 Points)

Name	8-point Transistor Output Unit with Terminal Block (Sinking Outputs)
Model	CJ1W-OD203
Rated Voltage	12 to 24 VDC
Operating Load Voltage Range	10.2 to 26.4 VDC
Maximum Load Current	0.5 A/point, 4.0 A/Unit
Maximum Inrush Current	4.0 A/point, 10 ms max.
Leakage Current	0.1 mA max.
Residual Voltage	1.5 V max.
ON Response Time	0.1 ms max.
OFF Response Time	0.8 ms max.
Insulation Resistance	20 MΩ between the external terminals and the GR terminal (100 VDC)
Dielectric Strength	1,000 VAC between the external terminals and the GR terminal for 1 minute at a leakage current of 10 mA max.
Number of Circuits	8 (8 points/common, 1 circuit)
Internal Current Consumption	100 mA max.
Fuse	None
External Power Supply	10.2 to 26.4 VDC, 20 mA min.
Weight	110 g max.
Circuit Configuration	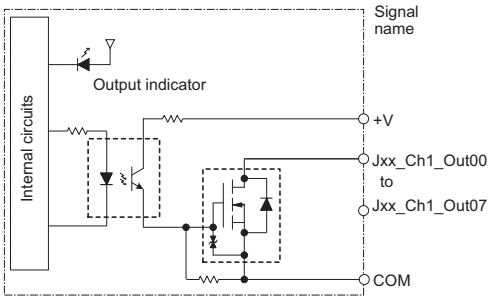
External connection and terminal-device variable diagram	*1 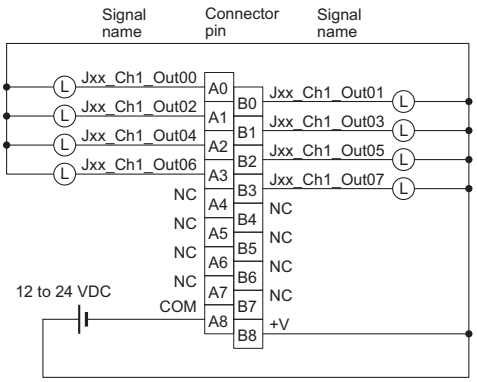 • When wiring, pay careful attention to the polarity of the external power supply. The load may operate incorrectly if the polarity is reversed.

*1. Terminal numbers A0 to A8 and B0 to B8 are used in the external connection and terminal-device variable diagrams. They are not printed on the Units.

● CJ1W-OD211 Transistor Output Unit (16 Points)

Name	16-point Transistor Output Unit with Terminal Block (Sinking Outputs)
Model	CJ1W-OD211
Rated Voltage	12 to 24 VDC
Operating Load Voltage Range	10.2 to 26.4 VDC
Maximum Load Current	0.5 A/point, 5.0 A/Unit
Maximum Inrush Current	4.0 A/point, 10 ms max.
Leakage Current	0.1 mA max.
Residual Voltage	1.5 V max.
ON Response Time	0.1 ms max.
OFF Response Time	0.8 ms max.
Insulation Resistance	20 MΩ between the external terminals and the GR terminal (100 VDC)
Dielectric Strength	1,000 VAC between the external terminals and the GR terminal for 1 minute at a leakage current of 10 mA max.
Number of Circuits	16 (16 points/common, 1 circuit)
Internal Current Consumption	5 VDC 100 mA max.
Fuse	None
External Power Supply	10.2 to 26.4 VDC, 20 mA min.
Weight	110 g max.
Circuit Configuration	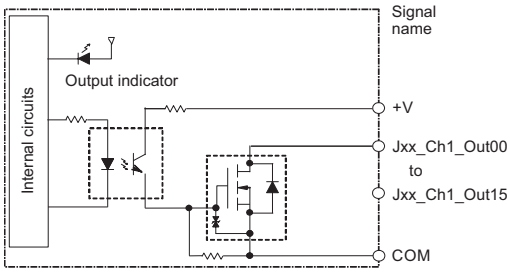
External connection and terminal-device variable diagram	*1 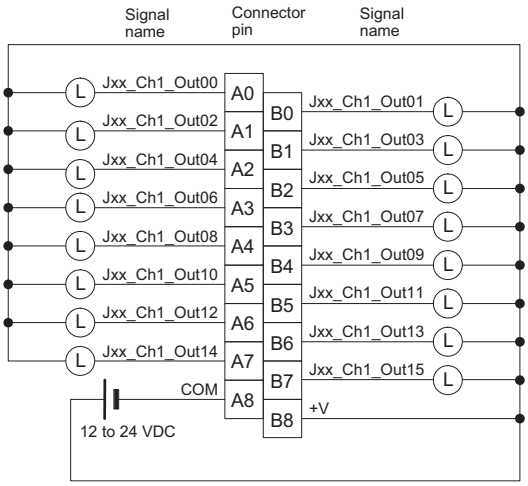 • When wiring, pay careful attention to the polarity of the external power supply. The load may operate incorrectly if the polarity is reversed.

*1. Terminal numbers A0 to A8 and B0 to B8 are used in the external connection and terminal-device variable diagrams. They are not printed on the Units.

● CJ1W-OD213 Transistor Output Unit (16 Points)

Name	16-point Transistor Output Unit with Terminal Block (Sinking Outputs)
Model	CJ1W-OD213
Rated Voltage	24 VDC
Operating Load Voltage Range	20.4 to 26.4 VDC
Maximum Load Current	0.5 A/point, 5.0 A/Unit
Maximum Inrush Current	4.0 A/point, 10 ms max.
Leakage Current	0.1 mA max.
Residual Voltage	1.5 V max.
ON Response Time	15 μs max.
OFF Response Time	80 μs max.
Insulation Resistance	20 MΩ between the external terminals and the GR terminal (100 VDC)
Dielectric Strength	1,000 VAC between the external terminals and the GR terminal for 1 minute at a leakage current of 10 mA max.
Number of Circuits	16 (16 points/common, 1 circuit)
Internal Current Consumption	5 VDC 150 mA max.
Fuse	None
External Power Supply	20.4 to 26.4 VDC, 55 mA min.
Weight	110 g max.
Circuit Configuration	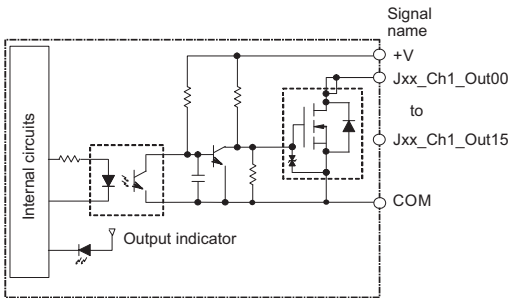
External connection and terminal-device variable diagram	*1 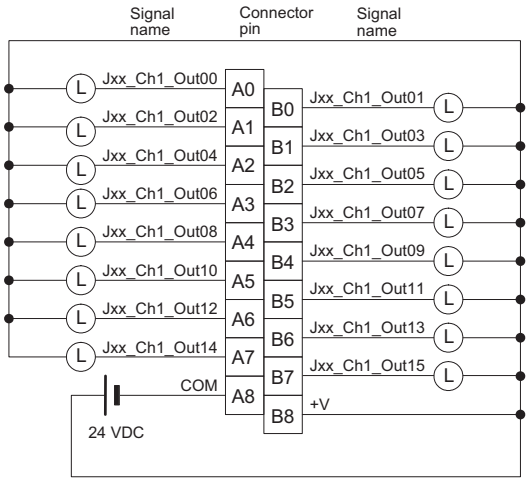 • When wiring, pay careful attention to the polarity of the external power supply. The load may operate incorrectly if the polarity is reversed.

*1. Terminal numbers A0 to A8 and B0 to B8 are used in the external connection and terminal-device variable diagrams. They are not printed on the Units.

● CJ1W-OD231 Transistor Output Unit (32 Points)

Name	32-point Transistor Output Unit with Fujitsu / OTAX Connector (Sinking Outputs)
Model	CJ1W-OD231
Rated Voltage	12 to 24 VDC
Operating Load Voltage Range	10.2 to 26.4 VDC
Maximum Load Current	0.5 A/point, 2.0 A/common, 4.0 A/Unit
Maximum Inrush Current	4.0 A/point, 10 ms max.
Leakage Current	0.1 mA max.
Residual Voltage	1.5 V max.
ON Response Time	0.1 ms max.
OFF Response Time	0.8 ms max.
Insulation Resistance	20 MΩ between the external terminals and the GR terminal (100 VDC)
Dielectric Strength	1,000 VAC between the external terminals and the GR terminal for 1 minute at a leakage current of 10 mA max.
Number of Circuits	32 (16 points/common, 2 circuits)
Internal Current Consumption	5 VDC 140 mA max.
Fuse	None
External Power Supply	10.2 to 26.4 VDC, 30 mA min.
Weight	70 g max.
Accessories	None
Circuit Configuration	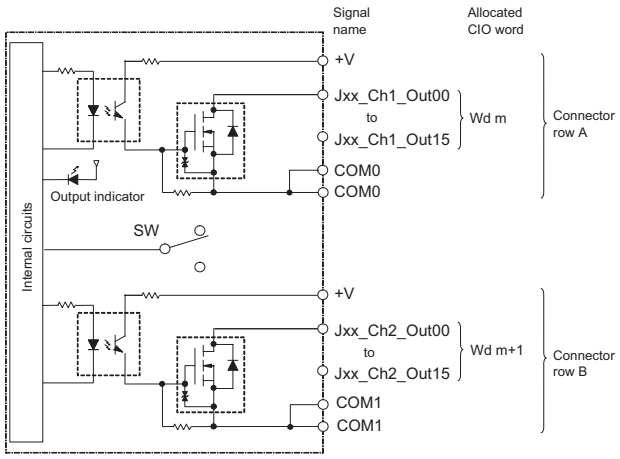

External connection and terminal-device variable diagram

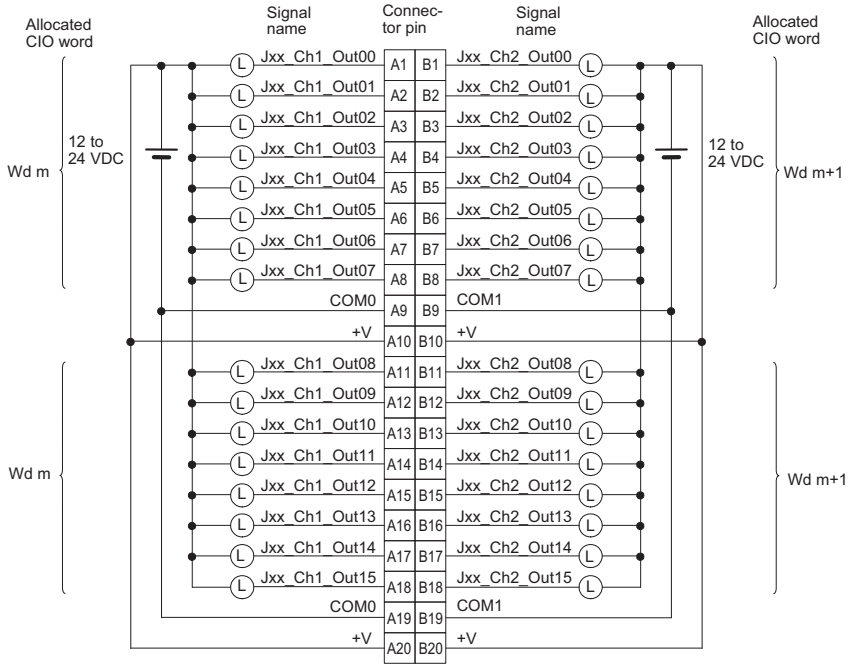

- When wiring, pay careful attention to the polarity of the external power supply. The load may operate incorrectly if the polarity is reversed.
- Be sure to wire both terminals A9 and A19 (COM0).
- Be sure to wire both terminals B9 and B19 (COM1).
- Be sure to wire both terminals A10 and A20 (+V).
- Be sure to wire both terminals B10 and B20 (+V).

● CJ1W-OD233 Transistor Output Unit (32 Points)

Name	32-point Transistor Output Unit with MIL Connector (Sinking Outputs)
Model	CJ1W-OD233
Rated Voltage	12 to 24 VDC
Operating Load Voltage Range	10.2 to 26.4 VDC
Maximum Load Current	0.5 A/point, 2 A/common, 4 A/Unit
Maximum Inrush Current	4.0 A/point, 10 ms max.
Leakage Current	0.1 mA max.
Residual Voltage	1.5 V max.
ON Response Time	0.1 ms max.
OFF Response Time	0.8 ms max.
Insulation Resistance	20 MΩ between the external terminals and the GR terminal (100 VDC)
Dielectric Strength	1,000 VAC between the external terminals and the GR terminal for 1 minute at a leakage current of 10 mA max.
Number of Circuits	32 (16 points/common, 2 circuits)
Internal Current Consumption	140 mA max.
Fuse	None
External Power Supply	12 to 24 VDC, 30 mA min.
Weight	70 g max.
Circuit Configuration	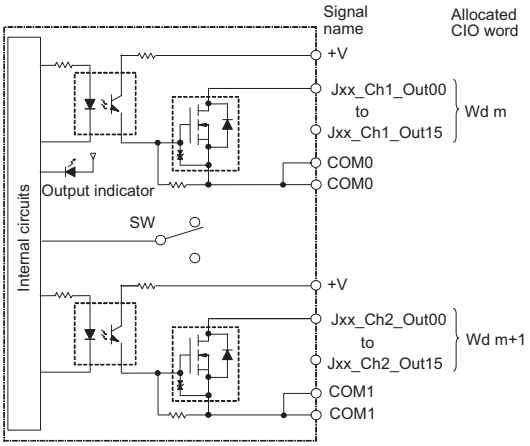

External connection and terminal-device variable diagram	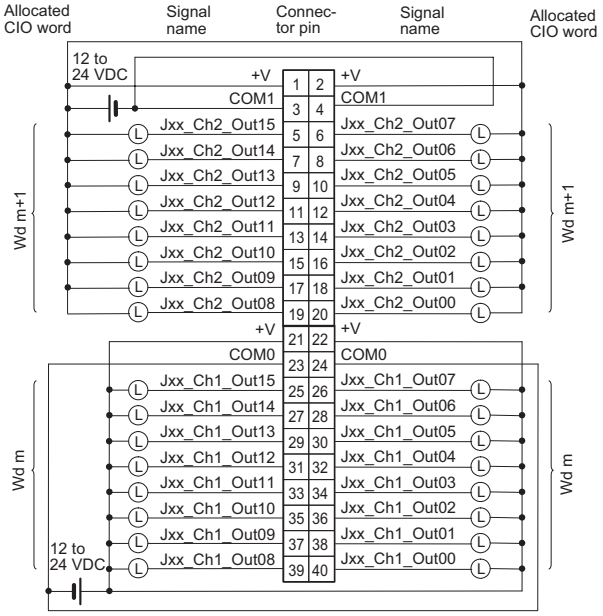 • When wiring, pay careful attention to the polarity of the external power supply. The load may operate incorrectly if the polarity is reversed. • Be sure to wire both terminals 23 and 24 (COM0). • Be sure to wire both terminals 3 and 4 (COM1). • Be sure to wire both terminals 21 and 22 (+V). • Be sure to wire both terminals 1 and 2 (+V).

● CJ1W-OD234 Transistor Output Unit (32 Points)

Name	32-point Transistor Output Unit with MIL Connector (Sinking Outputs)
Model	CJ1W-OD234
Rated Voltage	24 VDC
Operating Load Voltage Range	20.4 to 26.4 VDC
Maximum Load Current	0.5 A/point, 2 A/common, 4 A/Unit
Maximum Inrush Current	4.0 A/point, 10 ms max.
Leakage Current	0.1 mA max.
Residual Voltage	1.5 V max.
ON Response Time	15 μs max.
OFF Response Time	80 μs max.
Insulation Resistance	20 MΩ between the external terminals and the GR terminal (100 VDC)
Dielectric Strength	1,000 VAC between the external terminals and the GR terminal for 1 minute at a leakage current of 10 mA max.
Number of Circuits	32 (16 points/common, 2 circuits)
Internal Current Consumption	220 mA max.
Fuse	None
External Power Supply	20.4 to 26.4 VDC, 110 mA min.
Weight	70 g max.
Circuit Configuration	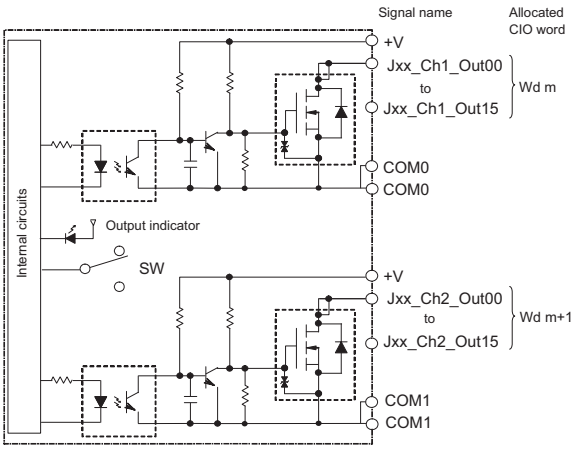

External connection and terminal-device variable diagram	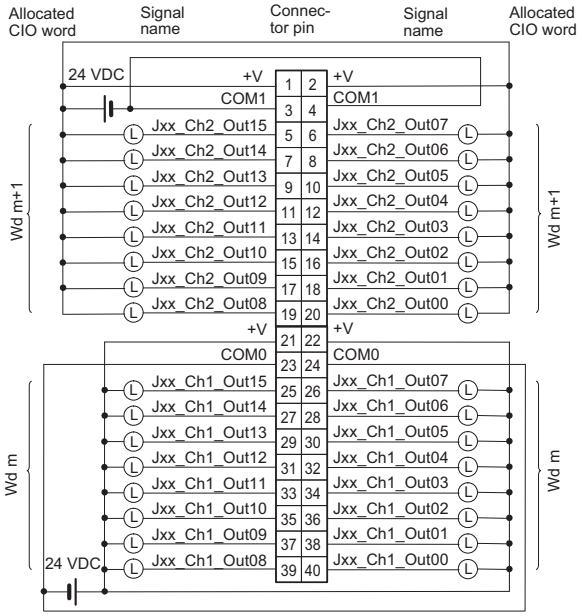 • When wiring, pay careful attention to the polarity of the external power supply. The load may operate incorrectly if the polarity is reversed. • Be sure to wire both terminals 23 and 24 (COM0). • Be sure to wire both terminals 3 and 4 (COM1). • Be sure to wire both terminals 21 and 22 (+V). • Be sure to wire both terminals 1 and 2 (+V).

● CJ1W-OD261 Transistor Output Unit (64 Points)

Name	64-point Transistor Output Unit with Fujitsu / OTAX Connectors (Sinking Outputs)
Model	CJ1W-OD261
Rated Voltage	12 to 24 VDC
Operating Load Voltage Range	10.2 to 26.4 VDC
Maximum Load Current	0.3 A/point, 1.6 A/common, 6.4 A/Unit
Maximum Inrush Current	3.0 A/point, 10 ms max.
Leakage Current	0.1 mA max.
Residual Voltage	1.5 V max.
ON Response Time	0.5 ms max.
OFF Response Time	1.0 ms max.
Insulation Resistance	20 MΩ between the external terminals and the GR terminal (100 VDC)
Dielectric Strength	1,000 VAC between the external terminals and the GR terminal for 1 minute at a leakage current of 10 mA max.
Number of Circuits	64 (16 points/common, 4 circuits)
Internal Current Consumption	5 VDC, 170 mA max.
Fuse	None
External Power Supply	10.2 to 26.4 VDC, 50 mA min.
Weight	110 g max.
Accessories	None
Circuit Configuration	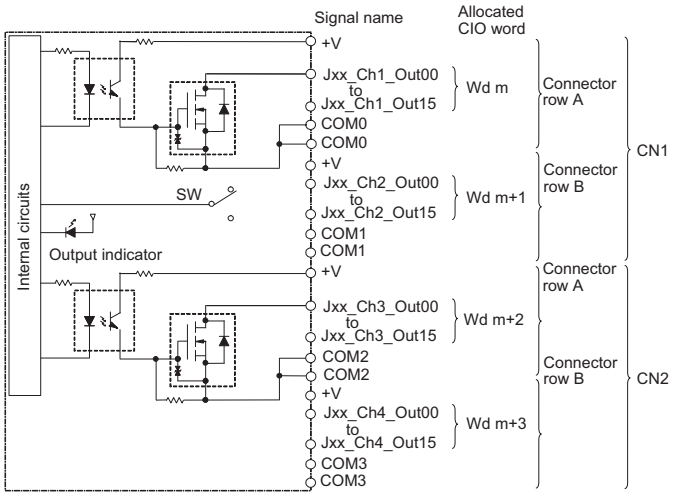

External connection and terminal-device variable diagram	CN1	CN2
	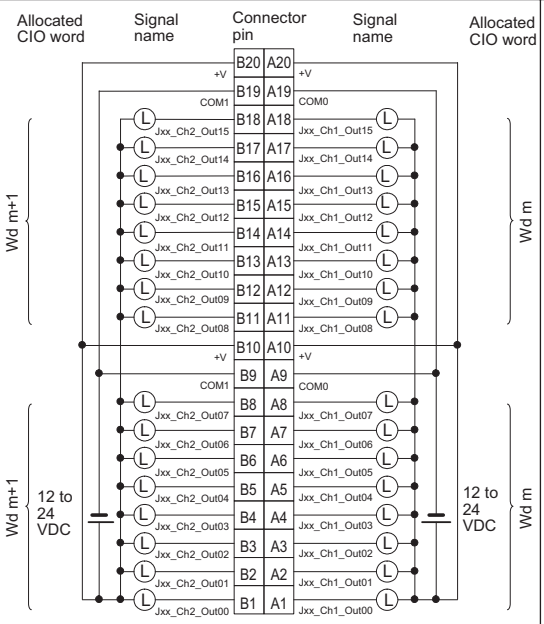	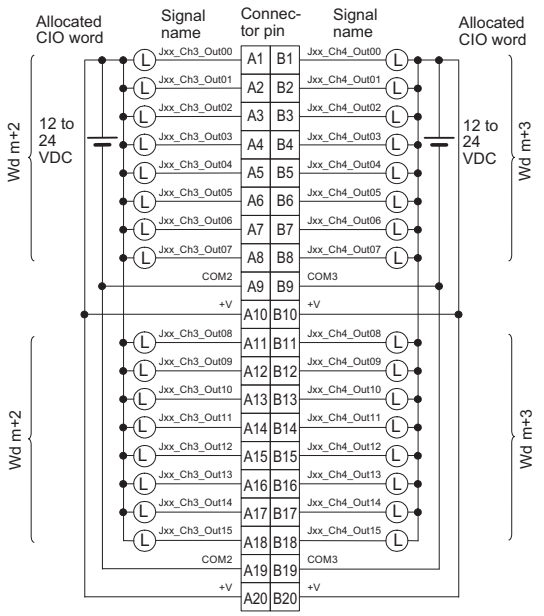
	• When wiring, pay careful attention to the polarity of the external power supply. The load may operate incorrectly if the polarity is reversed. • Be sure to wire both terminals A9 and A19 (COM0) of CN1. • Be sure to wire both terminals B9 and B19 (COM1) of CN1. • Be sure to wire both terminals A10 and A20 (+V) of CN1. • Be sure to wire both terminals B10 and B20 (+V) of CN1.	• When wiring, pay careful attention to the polarity of the external power supply. The load may operate incorrectly if the polarity is reversed. • Be sure to wire both terminals A9 and A19 (COM2) of CN2. • Be sure to wire both terminals B9 and B19 (COM3) of CN2. • Be sure to wire both terminals A10 and A20 (+V) of CN2. • Be sure to wire both terminals B10 and B20 (+V) of CN2.

● CJ1W-OD263 Transistor Output Unit (64 Points)

Name	64-point Transistor Output Unit with MIL Connectors (Sinking Outputs)
Model	CJ1W-OD263
Rated Voltage	12 to 24 VDC
Operating Load Voltage Range	10.2 to 26.4 VDC
Maximum Load Current	0.3 A/point, 1.6 A/common, 6.4 A/Unit
Maximum Inrush Current	3.0 A/point, 10 ms max.
Leakage Current	0.1 mA max.
Residual Voltage	1.5 V max.
ON Response Time	0.5 ms max.
OFF Response Time	1.0 ms max.
Insulation Resistance	20 MΩ between the external terminals and the GR terminal (100 VDC)
Dielectric Strength	1,000 VAC between the external terminals and the GR terminal for 1 minute at a leakage current of 10 mA max.
Number of Circuits	64 (16 points/common, 4 circuits)
Internal Current Consumption	170 mA max.
Fuse	None
External Power Supply	12 to 24 VDC, 50 mA min.
Weight	110 g max.
Circuit Configuration	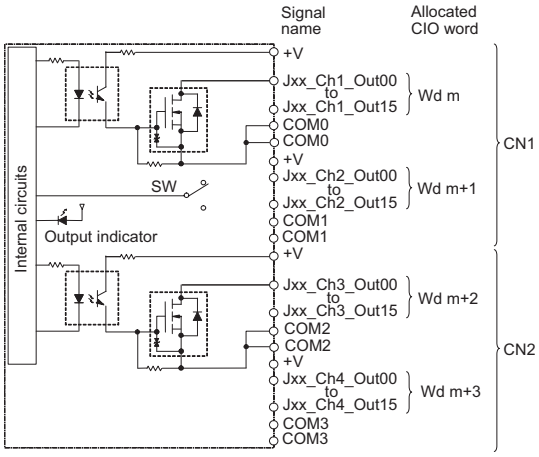

External connection and terminal-device variable diagram	CN1	CN2
	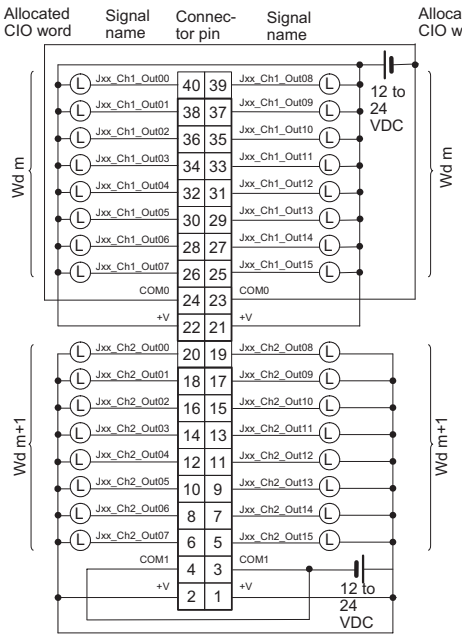 • When wiring, pay careful attention to the polarity of the external power supply. The load may operate incorrectly if the polarity is reversed. • Be sure to wire both terminals 23 and 24 (COM0) of CN1. • Be sure to wire both terminals 3 and 4 (COM1) of CN1. • Be sure to wire both terminals 21 and 22 (+V) of CN1. • Be sure to wire both terminals 1 and 2 (+V) of CN1.	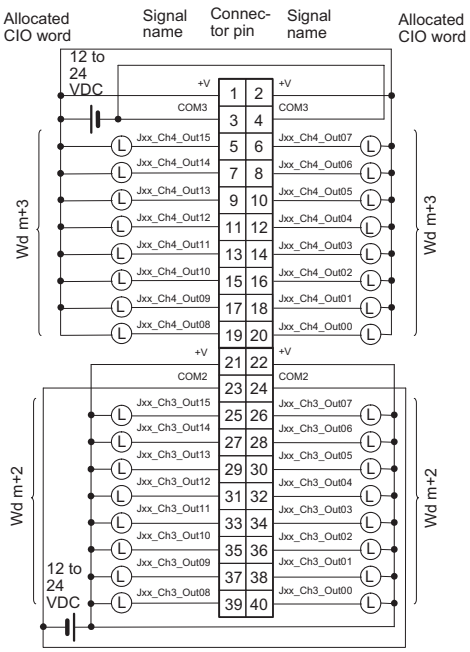 • When wiring, pay careful attention to the polarity of the external power supply. The load may operate incorrectly if the polarity is reversed. • Be sure to wire both terminals 23 and 24 (COM2) of CN2. • Be sure to wire both terminals 3 and 4 (COM3) of CN2. • Be sure to wire both terminals 21 and 22 (+V) of CN2. • Be sure to wire both terminals 1 and 2 (+V) of CN2.

● CJ1W-OD202 Transistor Output Unit (8 Points)

Name	8-point Transistor Output Unit with Terminal Block (Sourcing Outputs)
Model	CJ1W-OD202
Rated Voltage	24 VDC
Operating Load Voltage Range	20.4 to 26.4 VDC
Maximum Load Current	2 A/point, 8 A/Unit
Leakage Current	0.1 mA max.
Residual Voltage	1.5 V max.
ON Response Time	0.5 ms max.
OFF Response Time	1.0 ms max.
Load Short-circuit Protection	Detection current: 6 A min. Automatic restart after error clearance. (Refer to page A-121.)
Line Disconnection Detection	Detection current: 200 mA (Refer to page A-121.)
Insulation Resistance	20 MΩ between the external terminals and the GR terminal (100 VDC)
Dielectric Strength	1,000 VAC between the external terminals and the GR terminal for 1 minute at a leakage current of 10 mA max.
Number of Circuits	8 (4 points/common, 2 circuits)
Internal Current Consumption	110 mA max.
Fuse	None
External Power Supply	24 VDC, 50 mA min.
Weight	120 g max.
Circuit Configuration	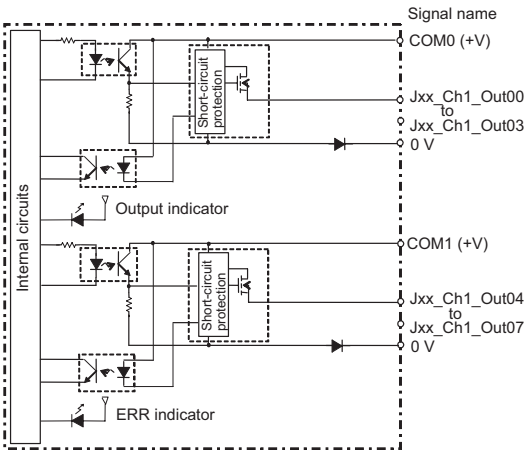 • When an overcurrent or line disconnection is detected, the *ERR* indicator will light. At the same time, the corresponding bit (two points per bit) in the *Basic I/O Unit Information Area* system-defined variable will change to TRUE.

External connection and terminal-device variable diagram	*1 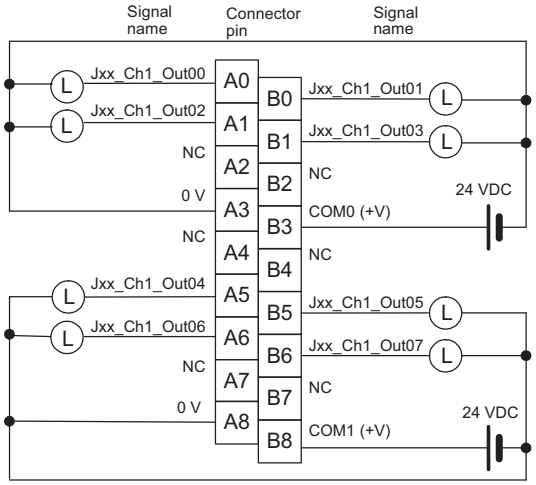 • When wiring, pay careful attention to the polarity of the external power supply. The load may operate incorrectly if the polarity is reversed.

*1. Terminal numbers A0 to A8 and B0 to B8 are used in the external connection and terminal-device variable diagrams. They are not printed on the Units.

● CJ1W-OD204 Transistor Output Unit (8 Points)

Name	8-point Transistor Output Unit with Terminal Block (Sourcing Outputs)
Model	CJ1W-OD204
Rated Voltage	24 VDC
Operating Load Voltage Range	20.4 to 26.4 VDC
Maximum Load Current	0.5 A/point, 4.0 A/Unit
Leakage Current	0.1 mA max.
Residual Voltage	1.5 V max.
ON Response Time	0.5 ms max.
OFF Response Time	1.0 ms max.
Load Short-circuit Protection	Detection current: 0.7 to 2.5 A Automatic restart after error clearance. (Refer to page A-124.)
Insulation Resistance	20 MΩ between the external terminals and the GR terminal (100 VDC)
Dielectric Strength	1,000 VAC between the external terminals and the GR terminal for 1 minute at a leakage current of 10 mA max.
Number of Circuits	8 (8 points/common, 1 circuit)
Internal Current Consumption	100 mA max.
Fuse	None
External Power Supply	20.4 to 26.4 VDC, 40 mA min.
Weight	120 g max.
Circuit Configuration	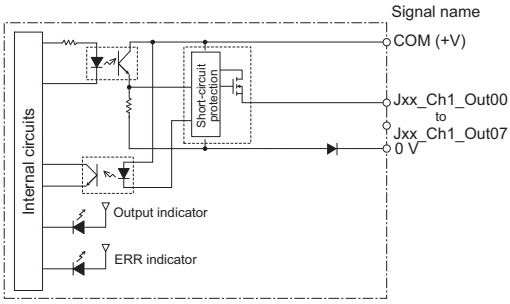 • When an overcurrent is detected, the *ERR* indicator will light. At the same time, the corresponding bit in the Basic I/O Unit Information Area system-defined variable will change to TRUE.
External connection and terminal-device variable diagram	*1 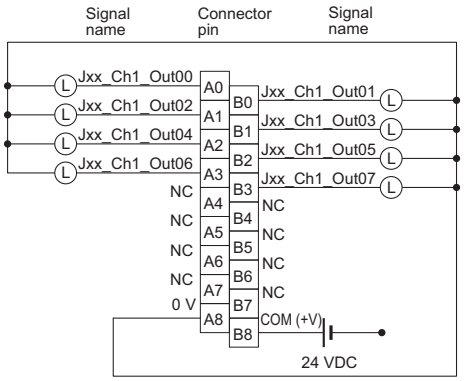 • When wiring, pay careful attention to the polarity of the external power supply. The load may operate incorrectly if the polarity is reversed.

*1. Terminal numbers A0 to A8 and B0 to B8 are used in the external connection and terminal-device variable diagrams. They are not printed on the Units.

● CJ1W-OD212 Transistor Output Unit (16 Points)

Name	16-point Transistor Output Unit with Terminal Block (Sourcing Outputs)
Model	CJ1W-OD212
Rated Voltage	24 VDC
Operating Load Voltage Range	20.4 to 26.4 VDC
Maximum Load Current	0.5 A/point, 5.0 A/Unit
Leakage Current	0.1 mA max.
Residual Voltage	1.5 V max.
ON Response Time	0.5 ms max.
OFF Response Time	1.0 ms max.
Load Short-circuit Protection	Detection current: 0.7 to 2.5 A Automatic restart after error clearance. (Refer to page A-124.)
Insulation Resistance	20 MΩ between the external terminals and the GR terminal (100 VDC)
Dielectric Strength	1,000 VAC between the external terminals and the GR terminal for 1 minute at a leakage current of 10 mA max.
Number of Circuits	16 (16 points/common, 1 circuit)
Internal Current Consumption	5 VDC, 100 mA max.
External Power Supply	20.4 to 26.4 VDC, 40 mA min.
Weight	120 g max.
Circuit Configuration	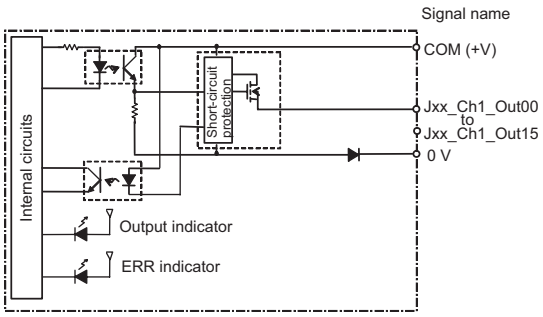 • When an overcurrent is detected, the *ERR* indicator will light. At the same time, the corresponding bit in the *Basic I/O Unit Information Area* system-defined variable will change to TRUE.

External connection and terminal-device variable diagram	*1 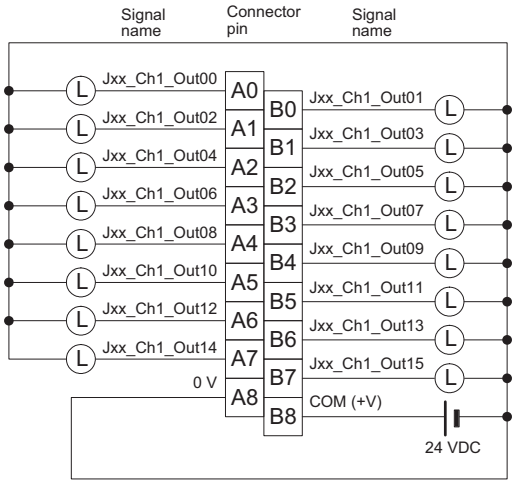 • When wiring, pay careful attention to the polarity of the external power supply. The load may operate incorrectly if the polarity is reversed.

*1. Terminal numbers A0 to A8 and B0 to B8 are used in the external connection and terminal-device variable diagrams. They are not printed on the Units.

● CJ1W-OD232 Transistor Output Unit (32 Points)

Name	32-point Transistor Output Unit with MIL Connector (Sourcing Outputs)
Model	CJ1W-OD232
Rated Voltage	24 VDC
Operating Load Voltage Range	20.4 to 26.4 VDC
Maximum Load Current	0.5 A/point, 2.0 A/common, 4.0 A/Unit
Leakage Current	0.1 mA max.
Residual Voltage	1.5 V max.
ON Response Time	0.5 ms max.
OFF Response Time	1.0 ms max.
Load Short-circuit Protection	Detection current: 0.7 to 2.5 A Automatic restart after error clearance. (Refer to page A-124.)
Insulation Resistance	20 MΩ between the external terminals and the GR terminal (100 VDC)
Dielectric Strength	1,000 VAC between the external terminals and the GR terminal for 1 minute at a leakage current of 10 mA max.
Number of Circuits	32 (16 points/common, 2 circuits)
Internal Current Consumption	5 VDC 150 mA max.
External Power Supply	20.4 to 26.4 VDC, 70 mA min.
Weight	80 g max.
Accessories	None
Circuit Configuration	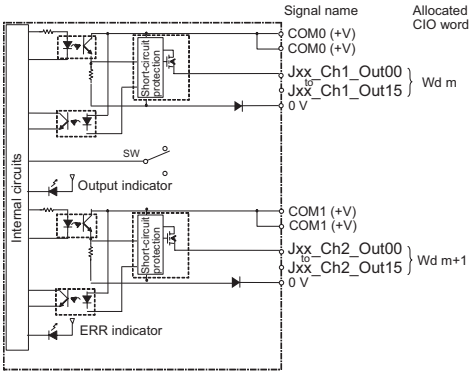 • When an overcurrent is detected, the *ERR* indicator will light. At the same time, the corresponding bit (one bit for each common) in the *Basic I/O Unit Information Area* system-defined variable will change to TRUE.

External connection and terminal-device variable diagram	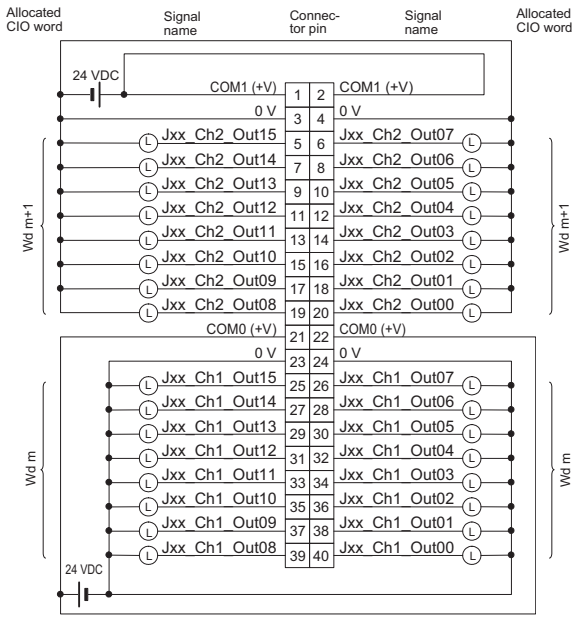 • When wiring, pay careful attention to the polarity of the external power supply. The load may operate incorrectly if the polarity is reversed. • Be sure to wire both terminals 21 and 22 (COM0 (+V)). • Be sure to wire both terminals 1 and 2 (COM1 (+V)). • Be sure to wire both terminals 3 and 4 (0 V). • Be sure to wire both terminals 23 and 24 (0 V).

● CJ1W-OD262 Transistor Output Unit (64 Points)

Name	64-point Transistor Output Unit with MIL Connectors (Sourcing Outputs)
Model	CJ1W-OD262
Rated Voltage	12 to 24 VDC
Operating Load Voltage Range	10.2 to 26.4 VDC
Maximum Load Current	0.3 A/point, 1.6 A/common, 6.4 A/Unit
Maximum Inrush Current	3.0 A/point, 10 ms max.
Leakage Current	0.1 mA max.
Residual Voltage	1.5 V max.
ON Response Time	0.5 ms max.
OFF Response Time	1.0 ms max.
Insulation Resistance	20 MΩ between the external terminals and the GR terminal (100 VDC)
Dielectric Strength	1,000 VAC between the external terminals and the GR terminal for 1 minute at a leakage current of 10 mA max.
Number of Circuits	64 (16 points/common, 4 circuits)
Internal Current Consumption	5 VDC, 170 mA max.
Fuse	None
External Power Supply	10.2 to 26.4 VDC, 50 mA min.
Weight	110 g max.
Accessories	None
Circuit Configuration	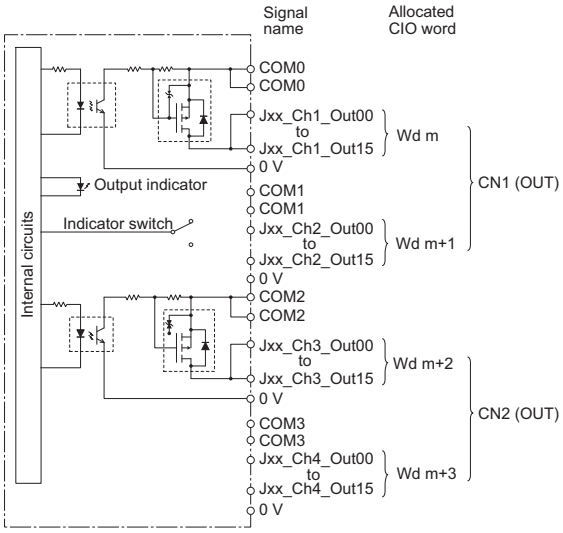

External connection and terminal-device variable diagram	CN1	CN2
	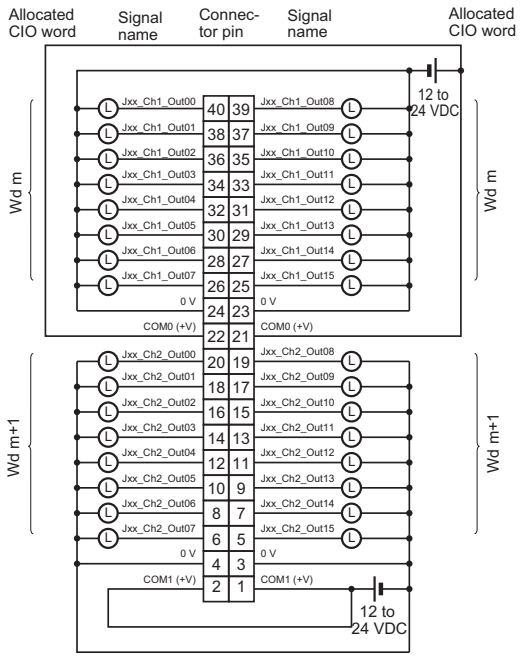	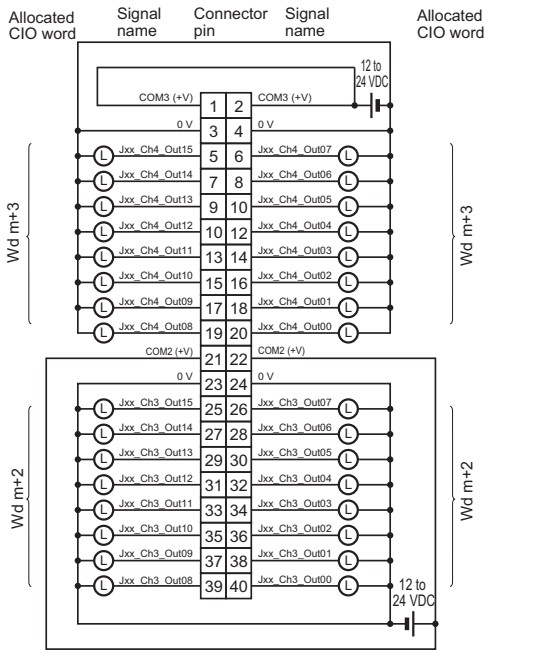
	• When wiring, pay careful attention to the polarity of the external power supply. The load may operate incorrectly if the polarity is reversed. • Be sure to wire both terminals 21 and 22 (COM0 (+V)) of CN1. • Be sure to wire both terminals 1 and 2 (COM1 (+V)) of CN1. • Be sure to wire both terminals 23 and 24 (0 V) of CN1. • Be sure to wire both terminals 3 and 4 (0 V) of CN1.	• When wiring, pay careful attention to the polarity of the external power supply. The load may operate incorrectly if the polarity is reversed. • Be sure to wire both terminals 21 and 22 (COM2 (+V)) of CN2. • Be sure to wire both terminals 1 and 2 (COM3 (+V)) of CN2. • Be sure to wire both terminals 23 and 24 (0 V) of CN2. • Be sure to wire both terminals 3 and 4 (0 V) of CN2.

Mixed I/O Units

● CJ1W-MD231 DC Input/Transistor Output Unit (24 VDC, 16 Inputs/16 Outputs)

Name	16-point DC Input/16-point Transistor Output Unit with Fujitsu / OTAX Connectors (Sinking Outputs)		
Model	CJ1W-MD231		
Output section (CN1)		**Input section (CN2)**	
Rated Voltage	12 to 24 VDC	**Rated Input Voltage**	24 VDC
Operating Load Voltage Range	10.2 to 26.4 VDC	**Operating Input Voltage**	20.4 to 26.4 VDC
Maximum Load Current	0.5 A/point, 2.0 A/Unit	**Input Impedance**	3.3 kΩ
Maximum Inrush Current	4.0 A/point, 10 ms max.	**Input Current**	7 mA typical (at 24 VDC)
Leakage Current	0.1 mA max.	**ON Voltage/ON Current**	14.4 VDC min./3 mA min.
Residual Voltage	1.5 V max.	**OFF Voltage/OFF Current**	5 VDC max./1 mA max.
ON Response Time	0.1 ms max.	**ON Response Time**	8.0 ms max. (Can be set to between 0 and 32 ms in the Unit Information settings.)*1
OFF Response Time	0.8 ms max.		
Number of Circuits	16 (16 points/common, 1 circuit)	**OFF Response Time**	8.0 ms max. (Can be set to between 0 and 32 ms in the Unit Information settings.)*1
Fuse	None		
External Power Supply	12 to 24 VDC, 20 mA min.	**No. of Circuits**	16 (16 points/common, 1 circuit)
		Number of Simultaneously ON Points	75% (at 24 VDC)
Insulation Resistance	20 MΩ between the external terminals and the GR terminal (at 100 VDC)		
Dielectric Strength	1,000 VAC between the external terminals and the GR terminal for 1 minute at a leakage current of 10 mA max.		
Internal Current Consumption	5 VDC 130 mA max.		
Weight	90 g max.		
Accessories	None		

	CN1 (OUT)	CN2 (IN)
Circuit Configuration	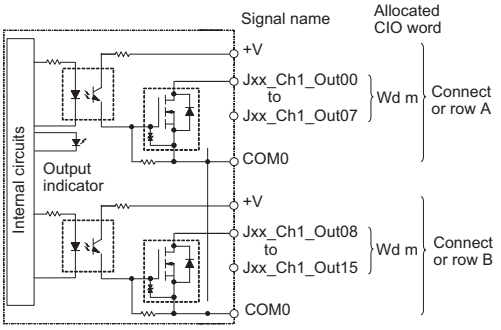	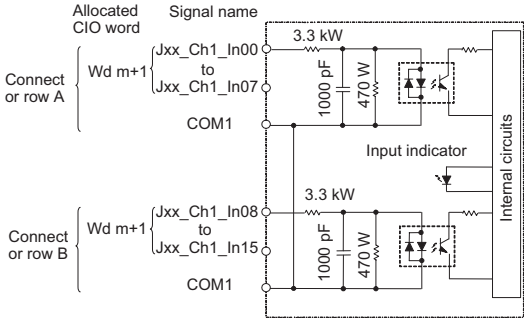 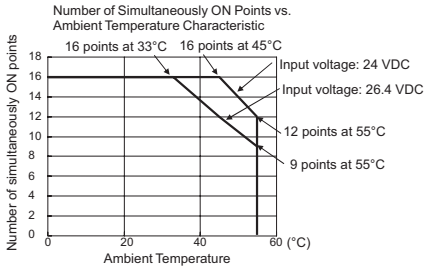
External connection and terminal-device variable diagram	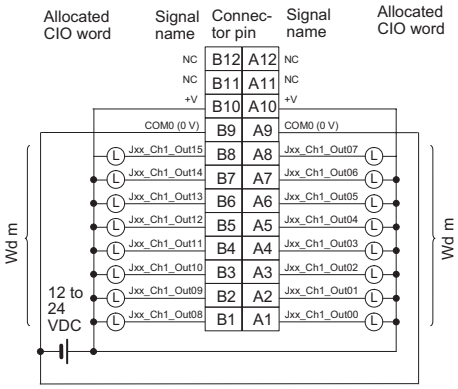 • When wiring, pay careful attention to the polarity of the external power supply. The load may operate incorrectly if polarity is reversed. • Be sure to wire both pins A9 and B9 (COM0 (0 V)) of CN1. • Be sure to wire both pins A10 and B10 (+V) of CN1.	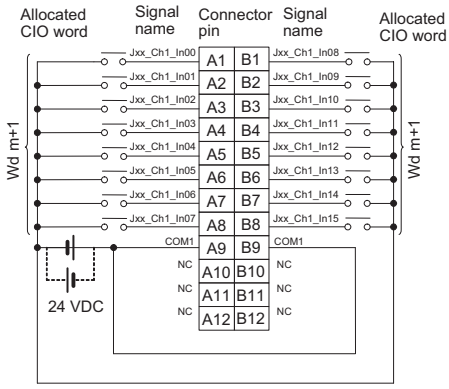 • When wiring, pay careful attention to the polarity of the external power supply. The load may operate incorrectly if polarity is reversed. • Be sure to wire both pins A9 and B9 (COM1) of CN2, and set the same polarity for both pins.

*1. The ON response time will be 20 μs maximum and OFF response time will be 400 μs maximum even if the response times are set to 0 ms due to internal element delays.

● CJ1W-MD233 DC Input/Transistor Output Unit (24 VDC, 16 Inputs/16 Outputs)

Name	16-point DC Input/16-point Transistor Output Unit with MIL Connectors (Sinking Outputs)		
Model	CJ1W-MD233		
Output section (CN1)		**Input section (CN2)**	
Rated Voltage	12 to 24 VDC	**Rated Input Voltage**	24 VDC
Operating Load Voltage Range	10.2 to 26.4 VDC	**Operating Input Voltage**	20.4 to 26.4 VDC
Maximum Load Current	0.5 A/point, 2.0 A/Unit	**Input Impedance**	3.3 kΩ
Maximum Inrush Current	4.0 A/point, 10 ms max.	**Input Current**	7 mA typical (at 24 VDC)
Leakage Current	0.1 mA max.	**ON Voltage/ON Current**	14.4 VDC min./3 mA min.
Residual Voltage	1.5 V max.	**OFF Voltage/OFF Current**	5 VDC max./1 mA max.
ON Response Time	0.1 ms max.	**ON Response Time**	8.0 ms max. (Can be set to between 0 and 32 ms in the Unit Information settings.)*1
OFF Response Time	0.8 ms max.		
Number of Circuits	16 (16 points/common, 1 circuit)	**OFF Response Time**	8.0 ms max. (Can be set to between 0 and 32 ms in the Unit Information settings.)*1
Fuse	None		
External Power Supply	12 to 24 VDC, 20 mA min.	**No. of Circuits**	16 (16 points/common, 1 circuit)
		Number of Simultaneously ON Points	75% (at 24 VDC)
Insulation Resistance	20 MΩ between the external terminals and the GR terminal (at 100 VDC)		
Dielectric Strength	1,000 VAC between the external terminals and the GR terminal for 1 minute at a leakage current of 10 mA max.		
Internal Current Consumption	5 VDC 130 mA max.		
Weight	90 g max.		
Accessories	None		
Circuit Configuration	**CN1 (OUT)**	**CN2 (IN)**	

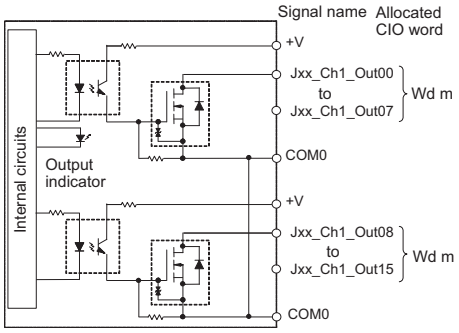

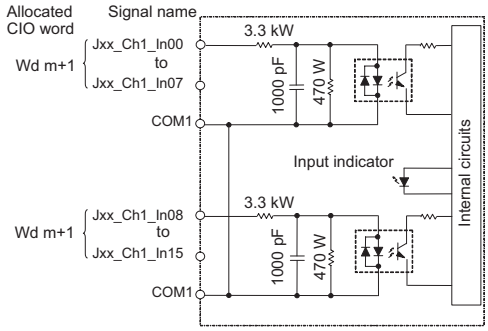

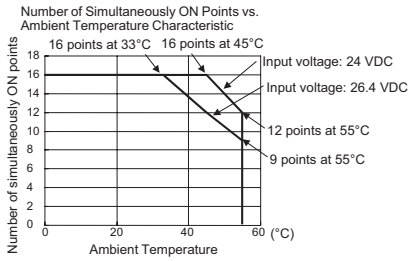

External connection and terminal-device variable diagram	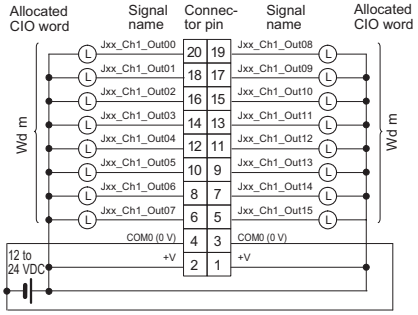 • When wiring, pay careful attention to the polarity of the external power supply. The load may operate incorrectly if polarity is reversed. • Be sure to wire both terminals 3 and 4 (COM0 (0 V)) of CN1. • Be sure to wire both terminals 1 and 2 (+V) of CN1.	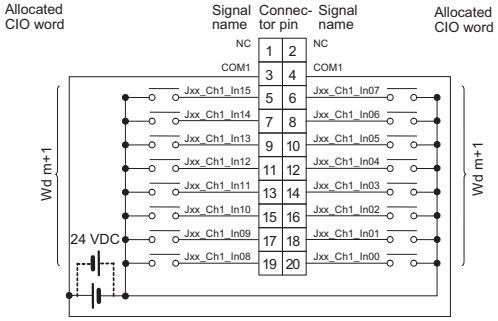 • When wiring, pay careful attention to the polarity of the external power supply. The load may operate incorrectly if polarity is reversed. • Be sure to wire both pins 3 and 4 (COM1) of CN2, and set the same polarity for both pins.

*1. The ON response time will be 20 μs maximum and OFF response time will be 400 μs maximum even if the response times are set to 0 ms due to internal element delays.

● CJ1W-MD261 DC Input/Transistor Output Unit (24 VDC 32 Inputs/32 Outputs)

Name	32-point DC Input/32-point Transistor Output Unit with Fujitsu / OTAX Connectors (Sinking Outputs)		
Model	CJ1W-MD261		
Output section (CN1)		**Input section (CN2)**	
Rated Voltage	12 to 24 VDC	**Rated Input Voltage**	24 VDC
Operating Load Voltage Range	10.2 to 26.4 VDC	**Operating Input Voltage**	20.4 to 26.4 VDC
Maximum Load Current	0.3 A/point, 1.6 A/common, 3.2 A/Unit	**Input Impedance**	5.6 kΩ
Maximum Inrush Current	3.0 A/point, 10 ms max.	**Input Current**	4.1 mA typical (at 24 VDC)
Leakage Current	0.1 mA max.	**ON Voltage/ON Current**	19.0 VDC min./3 mA min.*1
Residual Voltage	1.5 V max.	**OFF Voltage/OFF Current**	5 VDC max./1 mA max.
ON Response Time	0.5 ms max.	**ON Response Time**	8.0 ms max. (Can be set to between 0 and 32 ms in the Unit Information settings.)*2
OFF Response Time	1.0 ms max.		
Number of Circuits	32 (16 points/common, 2 circuits)	**OFF Response Time**	8.0 ms max. (Can be set to between 0 and 32 ms in the Unit Information settings.)*2
Fuse	None		
External Power Supply	12 to 24 VDC, 30 mA min.	**No. of Circuits**	32 (16 points/common, 2 circuits)
		Number of Simultaneously ON Points	75% (24 points) (at 24 VDC)
Insulation Resistance	20 MΩ between the external terminals and the GR terminal (at 100 VDC)		
Dielectric Strength	1,000 VAC between the external terminals and the GR terminal for 1 minute at a leakage current of 10 mA max.		
Internal Current Consumption	5 VDC 140 mA max.		
Weight	110 g max.		
Accessories	None		

Circuit Configuration

CN1 (OUT)

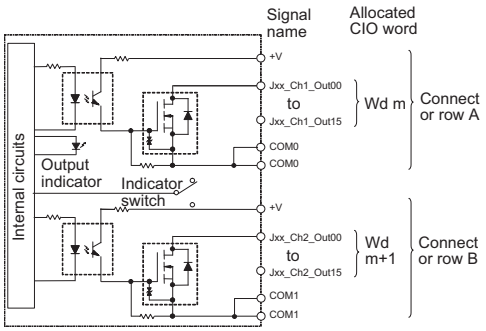

CN2 (IN)

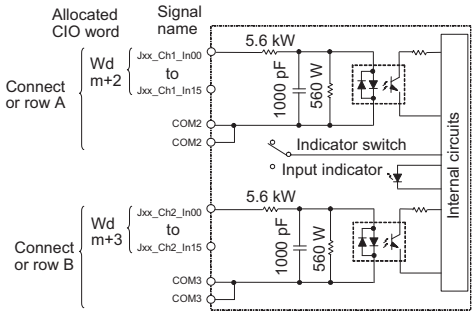

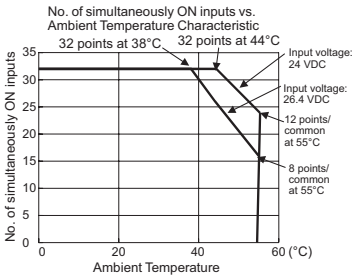

External connection and terminal-device variable diagram	CN1 (OUT)	CN2 (IN)
	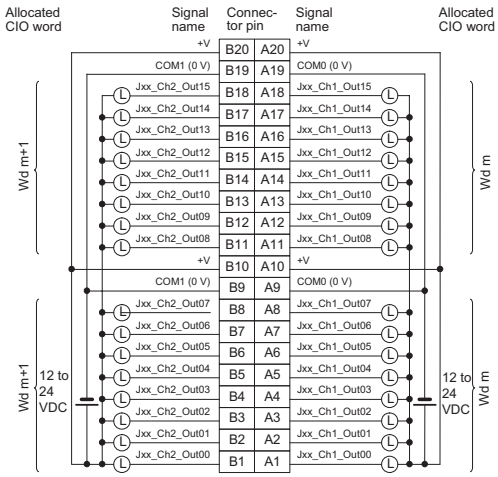 • Be sure to wire both terminals A19 and A9 (COM0 (0 V)) of CN1. • Be sure to wire both terminals B19 and B9 (COM1 (0 V)) of CN1. • Be sure to wire both terminals A20 and A10 (+V) of CN1. • Be sure to wire both terminals B20 and B10 (+V) of CN1. • When wiring, pay careful attention to the polarity of the external power supply. The load may operate incorrectly if polarity is reversed.	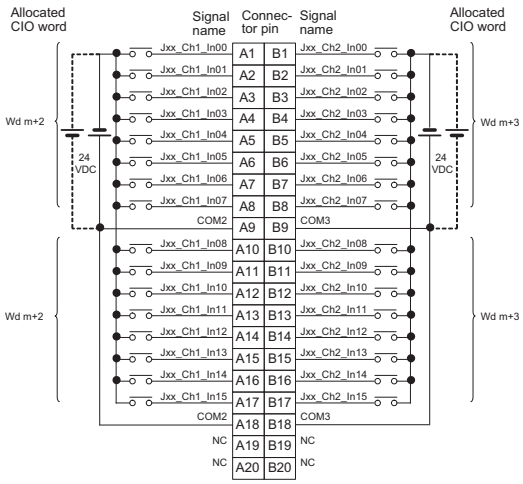 • Be sure to wire both pins A9 and A18 (COM2) of CN2, and set the same polarity for both pins. • Be sure to wire both pins B9 and B18 (COM3) of CN2, and set the same polarity for both pins. • When wiring, pay careful attention to the polarity of the external power supply. The load may operate incorrectly if polarity is reversed.

*1. Observe the following restrictions when connecting to a 2-wire sensor.
- Make sure the input power supply voltage is larger than the ON voltage (19 V) plus the residual voltage of the sensor (approx. 3 V).
- Use a sensor with a minimum load current of 3 mA min.
- Connect bleeder resistance if you connect a sensor with a minimum load current of 5 mA or higher.

*2. The ON response time will be 120 μs maximum and OFF response time will be 400 μs maximum even if the response times are set to 0 ms due to internal element delays.

● CJ1W-MD263 DC Input/Transistor Output Unit (24 VDC 32 Inputs/32 Outputs)

Name	32-point DC Input/32-point Transistor Output Unit with MIL Connectors (Sinking Outputs)		
Model	CJ1W-MD263		
Output section (CN1)		**Input section (CN2)**	
Rated Voltage	12 to 24 VDC	**Rated Input Voltage**	24 VDC
Operating Load Voltage Range	10.2 to 26.4 VDC	**Operating Input Voltage**	20.4 to 26.4 VDC
Maximum Load Current	0.3 A/point, 1.6 A/common, 3.2 A/Unit	**Input Impedance**	5.6 kΩ
Maximum Inrush Current	3.0 A/point, 10 ms max.	**Input Current**	4.1 mA typical (at 24 VDC)
Leakage Current	0.1 mA max.	**ON Voltage/ON Current**	19.0 VDC min./3 mA min.*1
Residual Voltage	1.5 V max.	**OFF Voltage/OFF Current**	5 VDC max./1 mA max.
ON Response Time	0.5 ms max.	**ON Response Time**	8.0 ms max. (Can be set to between 0 and 32 ms in the Unit Information settings.)*2
OFF Response Time	1.0 ms max.		
Number of Circuits	32 (16 points/common, 2 circuits)	**OFF Response Time**	8.0 ms max. (Can be set to between 0 and 32 ms in the Unit Information settings.)*2
Fuse	None		
External Power Supply	12 to 24 VDC, 30 mA min.	**No. of Circuits**	32 (16 points/common, 2 circuits)
		Number of Simultaneously ON Points	75% (24 points) (at 24 VDC)
Insulation Resistance	20 MΩ between the external terminals and the GR terminal (at 100 VDC)		
Dielectric Strength	1,000 VAC between the external terminals and the GR terminal for 1 minute at a leakage current of 10 mA max.		
Internal Current Consumption	5 VDC 140 mA max.		
Weight	110 g max.		
Accessories	None		

Circuit Configuration

CN1 (OUT)

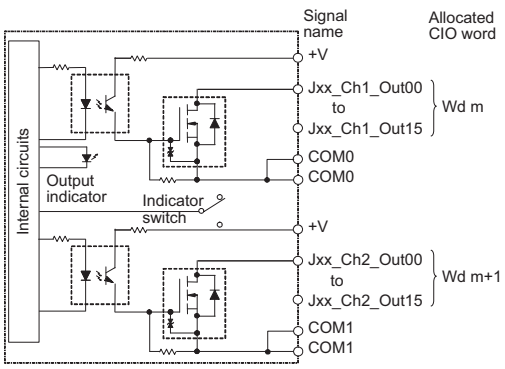

CN2 (IN)

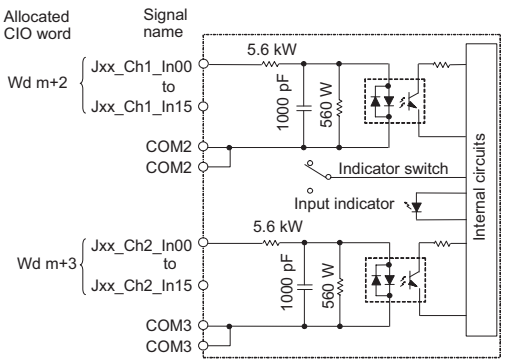

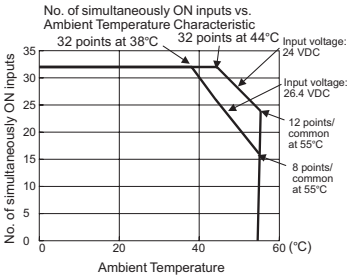

External connection and terminal-device variable diagram	CN1 (OUT)	CN2 (IN)
	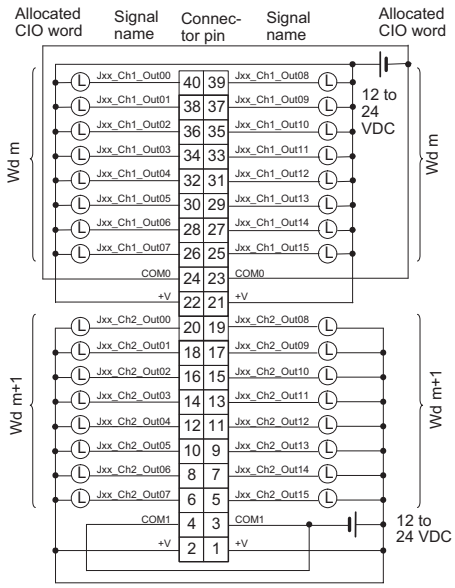 • Be sure to wire both terminals 23 and 24 (COM0) of CN1. • Be sure to wire both terminals 3 and 4 (COM1) of CN1. • Be sure to wire both terminals 21 and 22 (+V) of CN1. • Be sure to wire both terminals 1 and 2 (+V) of CN1. • When wiring, pay careful attention to the polarity of the external power supply. The load may operate incorrectly if polarity is reversed.	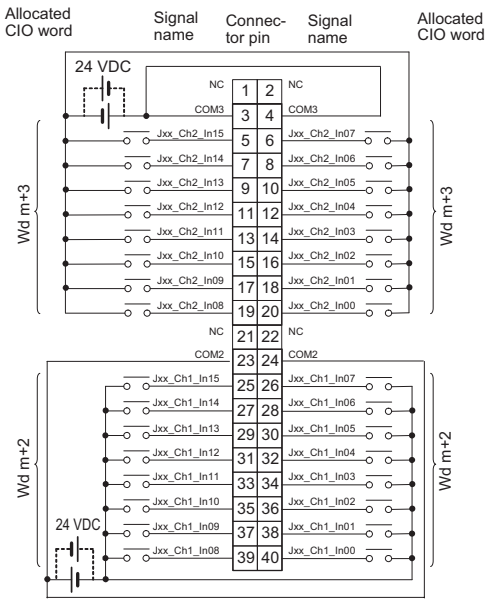 • Be sure to wire both pins 23 and 24 (COM2) of CN2, and set the same polarity for both pins. • Be sure to wire both pins 3 and 4 (COM3) of CN2, and set the same polarity for both pins. • When wiring, pay careful attention to the polarity of the external power supply. The load may operate incorrectly if polarity is reversed.

*1. Observe the following restrictions when connecting to a 2-wire sensor.
- Make sure the input power supply voltage is larger than the ON voltage (19 V) plus the residual voltage of the sensor (approx. 3 V).
- Use a sensor with a minimum load current of 3 mA min.
- Connect bleeder resistance if you connect a sensor with a minimum load current of 5 mA or higher.

*2. The ON response time will be 120 μs maximum and OFF response time will be 400 μs maximum even if the response times are set to 0 ms due to internal element delays.

● CJ1W-MD232 DC Input/Transistor Output Unit (24 VDC, 16 inputs/16 Outputs)

Name	16-point DC Input/16-point Transistor Output Unit with MIL Connectors (Sourcing Outputs)		
Model	CJ1W-MD232		
Output section (CN1)		**Input section (CN2)**	
Rated Voltage	24 VDC	**Rated Input Voltage**	24 VDC
Operating Load Voltage Range	20.4 to 26.4 VDC	**Operating Input Voltage**	20.4 to 26.4 VDC
Maximum Load Current	0.5 A/point, 2.0 A/Unit	**Input Impedance**	3.3 kΩ
Leakage Current	0.1 mA max.	**Input Current**	7 mA typical (at 24 VDC)
Residual Voltage	1.5 V max.	**ON Voltage/ON Current**	14.4 VDC min./3 mA min.
ON Response Time	0.5 ms max.	**OFF Voltage/OFF Current**	5 VDC max./1 mA max.
OFF Response Time	1.0 ms max.	**ON Response Time**	8.0 ms max. (Can be set to between 0 and 32 ms in the Unit Information settings.)*1
Load Short-circuit Protection	Detection current: 0.7 to 2.5 A min. Automatic restart after error clearance. (Refer to page A-124.)	**OFF Response Time**	8.0 ms max. (Can be set to between 0 and 32 ms in the Unit Information settings.)*1
No. of Circuits	16 (16 points/common, 1 circuit)	**No. of Circuits**	16 (16 points/common, 1 circuit)
External Power Supply	20.4 to 26.4 VDC, 40 mA min.	**Number of Simultaneously ON Points**	75% (at 24 VDC)
Insulation Resistance	20 MΩ between the external terminals and the GR terminal (at 100 VDC)		
Dielectric Strength	1,000 VAC between the external terminals and the GR terminal for 1 minute at a leakage current of 10 mA max.		
Internal Current Consumption	5 VDC 130 mA max.		
Weight	100 g max.		
Accessories	None		

	CN1 (OUT)	CN2 (IN)
Circuit Configuration	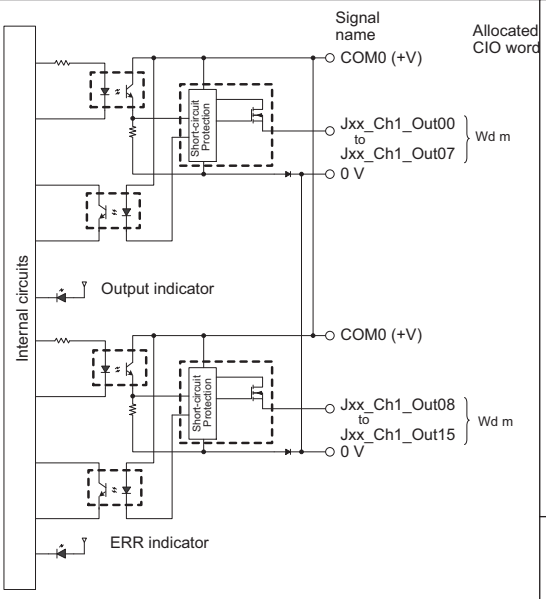	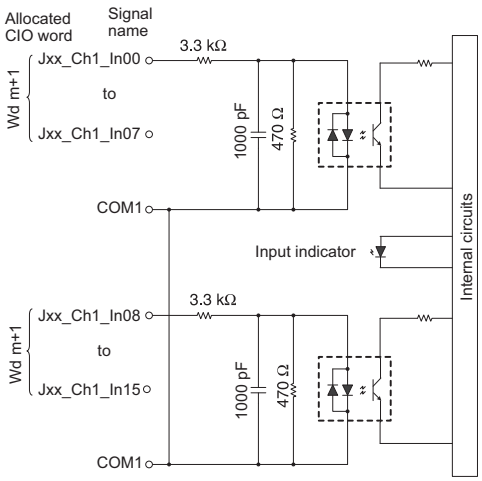 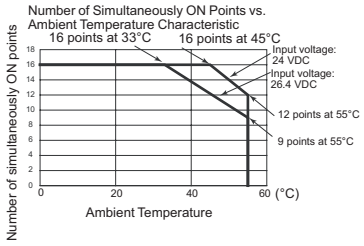
External connection and terminal-device variable diagram	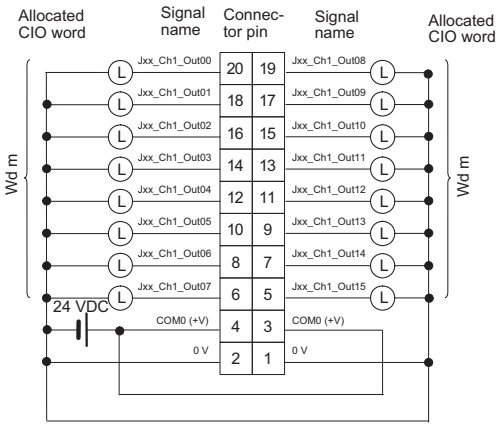 • When wiring, pay careful attention to the polarity of the external power supply. The load may operate incorrectly if polarity is reversed. • Be sure to wire both terminals 3 and 4 ((COM0 (+V)) of CN1. • Be sure to wire both terminals 1 and 2 (0 V) of CN1.	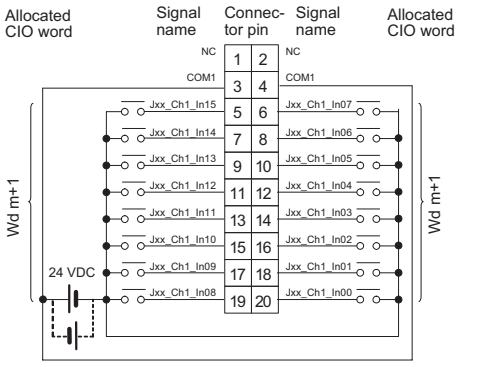 • When wiring, pay careful attention to the polarity of the external power supply. The load may operate incorrectly if polarity is reversed. • Be sure to wire both pins 3 and 4 (COM1) of CN2, and set the same polarity for both pins.

*1. The ON response time will be 20 μs maximum and OFF response time will be 400 μs maximum even if the response times are set to 0 ms due to internal element delays.

● CJ1W-MD563 TTL I/O Unit (32 Inputs/32 Outputs)

Name	32-point Input /32-point Output TTL I/O Unit with MIL Connectors		
Model	CJ1W-MD563		
Output section (CN1)		**Input section (CN2)**	
Rated Voltage	5 VDC±10%	**Rated Input Voltage**	5 VDC±10%
Operating Load Voltage Range	4.5 to 5.5 VDC	**Input Impedance**	1.1 kΩ
Maximum Load Current	35 mA/point, 560 mA/common, 1.12 A/Unit	**Input Current**	Approx. 3.5 mA (at 5 VDC)
		ON Voltage	3.0 VDC min.
Leakage Current	0.1 mA max.	**OFF Voltage**	1.0 VDC max.
Residual Voltage	0.4 V max.	**ON Response Time**	8.0 ms max. (Can be set to between 0 and 32 ms in the Unit Information settings.)*1
ON Response Time	0.2 ms max.		
OFF Response Time	0.3 ms max.	**OFF Response Time**	8.0 ms max. (Can be set to between 0 and 32 ms in the Unit Information settings.)*1
No. of Circuits	32 (16 points/common, 2 circuits)		
Fuse	None	**No. of Circuits**	32 points (16 points/common, 2 circuits)
External Power Supply	5 VDC±10%, 40 mA min. (1.2 mA × No. of ON points)	**Number of Simultaneously ON Points**	100% simultaneously ON (16 points/common)
Insulation Resistance	20 MΩ between the external terminals and the GR terminal (at 100 VDC)		
Dielectric Strength	1,000 VAC between the external terminals and the GR terminal for 1 minute at a leakage current of 10 mA max.		
Internal Current Consumption	5 VDC 190 mA max.		
Weight	110 g max.		
Accessories	None		
Circuit Configuration	**CN1 (OUT)**	**CN2 (IN)**	

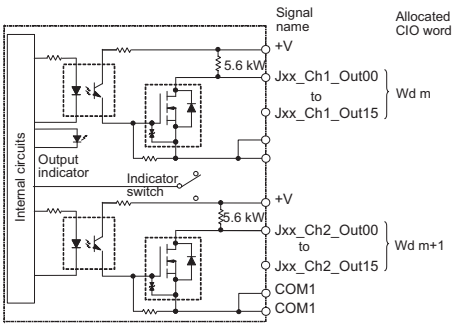

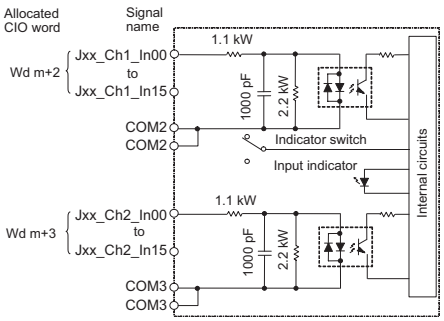

External connection and terminal-device variable diagram	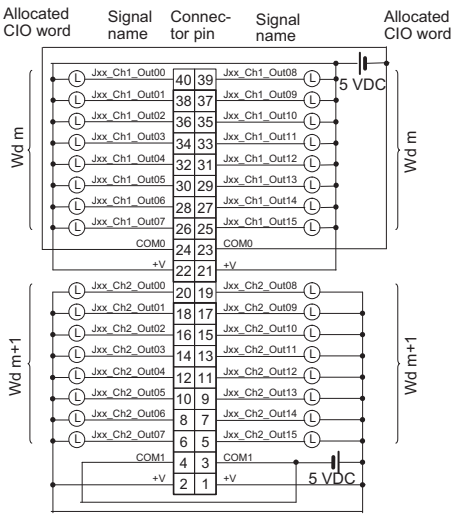 • When wiring, pay careful attention to the polarity of the external power supply. The load may operate incorrectly if the polarity is reversed. • Be sure to wire both terminals 23 and 24 (COM0) of CN1. • Be sure to wire both terminals 3 and 4 (COM1) of CN1. • Be sure to wire both terminals 21 and 22 (+V) of CN1. • Be sure to wire both terminals 1 and 2 (+V) of CN1.	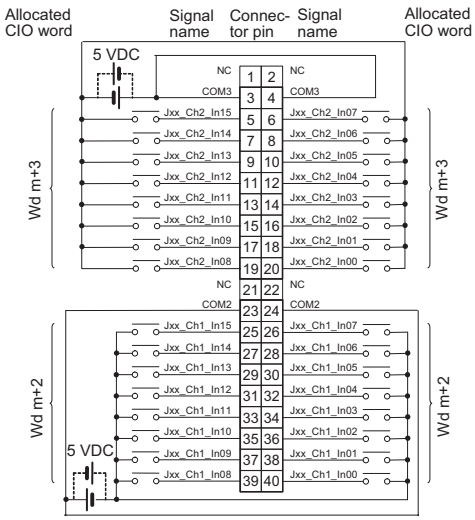 • When wiring, pay careful attention to the polarity of the external power supply. The load may operate incorrectly if the polarity is reversed. • Be sure to wire both pins 23 and 24 (COM2) of CN2, and set the same polarity for both pins. • Be sure to wire both pins 3 and 4 (COM3) of CN2, and set the same polarity for both pins.

*1. The ON response time will be 120 μs maximum and OFF response time will be 400 μs maximum even if the response times are set to 0 ms due to internal element delays.

A-2-3 Precautions on Contact Output Units

Service Life Expectancy

The service life expectancy of the relays (NY-24W-K-IE) in the CJ1W-OC201/211 Contact Output Units depends on the type of load, the contact current, and the ambient temperature.
Use the following diagrams to calculate the relay service life based on the operating conditions, and replace the relay before the end of its service life.

Contact Current vs. Service Life Characteristic

Service Life with AC Load

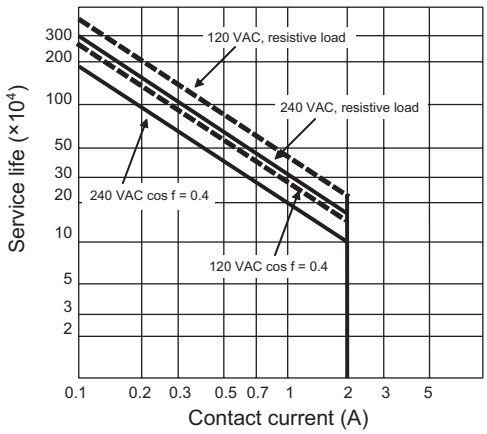

Service Life with DC Load

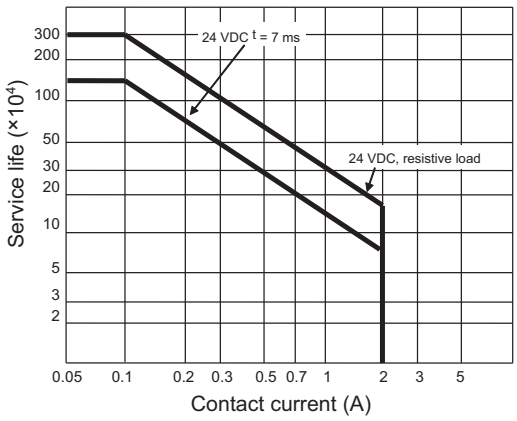

Switching frequency: 1,800 operations/hour max.

Precautions for Correct Use

The above charts show the life characteristics for the individual relays. Do not exceed the specifications of the Relay Output Units. If a switching capacity exceeding the specifications is used, the reliability and life expectancy of other parts will be reduced and the Unit may malfunction.

Inductive Load

The life of the Relay varies with the load inductance.
If any inductive load is connected to the Contact Output Unit, use an arc killer with the Contact Output Unit. (page A-71)
Be sure to connect a diode in parallel with every DC inductive load that is connected to the Contact Output Unit. The usage of an arc killer has a significant effect on the service life of the contacts.

Contact Protection Circuit

Arc killers are used with the Contact Output Unit in order to prolong the life of each Relay mounted to the Contact Output Unit, prevent noise, and reduce the generation of carbide and nitrate deposits. However, if arc killers are used incorrectly, they can reduce relay life. Using an arc killer can also

cause a delay in the resetting time (shut-off time). Arc killer circuit examples are listed in the following table.

Circuit		Current		Characteristic	Required element
		AC	DC		
CR method	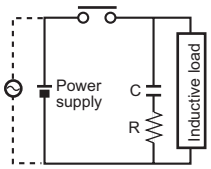	Yes	Yes	If the load is a relay or solenoid, there is a delay in the resetting time. If the supply voltage is 24 or 48 V, insert the arc killer in parallel with the load. If the supply voltage is 100 to 200 V, insert the arc killer between the contacts.	The capacitance of the capacitor should be approx. 1 to 0.5 μF per contact current of 1 A and resistance of the resistor should be approx. 0.5 to 1 Ω per contact voltage of 1 V. These values, however, vary with the load and the characteristics of the relay. Decide these values from experiments, and take into consideration that the capacitance suppresses spark discharge when the contacts are separated and the resistance limits the current that flows into the load when the circuit is closed again. The dielectric strength of the capacitor must be 200 to 300 V. If the circuit is an AC circuit, use a capacitor with no polarity.
Diode method	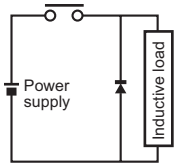	No	Yes	The diode connected in parallel with the load changes energy accumulated by the coil into a current, which then flows into the coil so that the current will be converted into Joule heat by the resistance of the inductive load. This delay in the resetting time caused by this method is longer than that caused by the CR method.	The reversed dielectric strength value of the diode must be at least 10 times as large as the circuit voltage value. The forward current of the diode must be the same as or larger than the load current. The reversed dielectric strength value of the diode may be two to three times larger than the supply voltage if the arc killer is applied to electronic circuits with low circuit voltages.
Varistor method	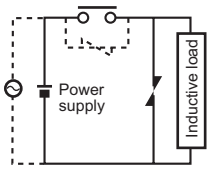	Yes	Yes	The varistor method prevents the imposition of high voltage between the contacts by using the constant voltage characteristic of the varistor. There is delay in the resetting time. If the supply voltage is 24 or 48 V, insert the varistor in parallel with the load. If the supply voltage is 100 to 200 V, insert the varistor between the contacts.	---

Precautions for Correct Use

Do not connect a capacitor as an arc killer in parallel with an inductive load as shown in the diagram on the right.
This arc killer is very effective for preventing spark discharge at the moment when the circuit is opened. However, at the moment the contacts are closed, the contacts may be welded due to the current charged in the capacitor. DC inductive loads can be more difficult to switch than resistive loads. If appropriate arc killers are used, however, DC inductive loads will be as easy to switch as resistive loads.

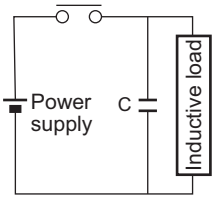

A-2-4 Connecting Connector-Terminal Block Conversion Units and I/O Relay Terminals

Patterns for Combining Connector-Terminal Block Conversion Units and I/O Relay Terminals

The following patterns can be used to connect Basic I/O Units with Connectors to OMRON Connector-Terminal Block Conversion Units and I/O Relay Terminals using OMRON Connecting Cables.

● Connection Patterns for Connector-Terminal Block Conversion Units

Pattern	Configuration	Number of connectors	Branching
A	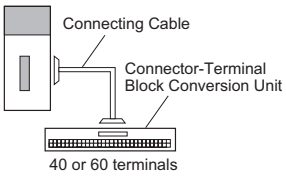	1	None
B	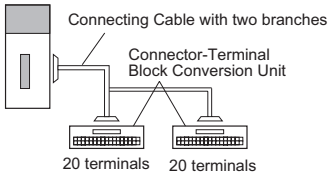		2 branches
C	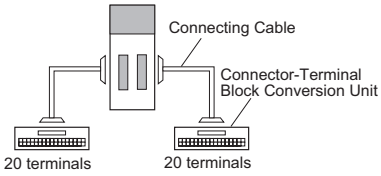	2	None
D	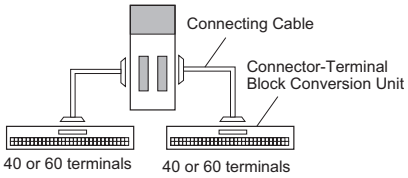		
F	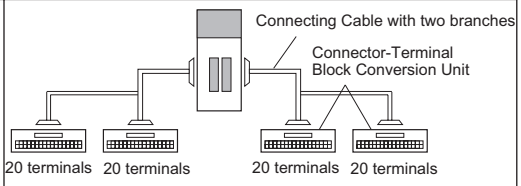		2 branches

● Connection Patterns for I/O Relay Terminals

Pattern	Configuration
A	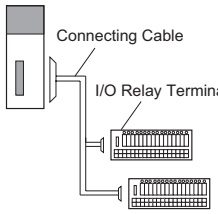
B	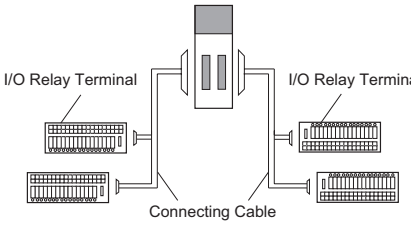
E	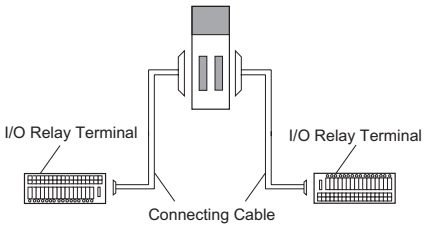
F	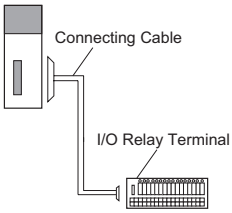

Combinations of Connections

Combinations of OMRON Connecting Cables with Connector-Terminal Block Conversion Units and I/O Relay Terminals are shown below.

● Connections to Connector-Terminal Block Conversion Units

Unit	I/O capacity	Number of connectors	Polarity	Connection pattern	Number of branches	Connecting Cable	Connector-Terminal Block Conversion Unit	Common terminal	Connection diagram
CJ1W-ID231	32 inputs	1 Fujitsu / OTAX connector	NPN/PNP	A	None	XW2Z-□□□B	XW2D-40G6	None	page A-89
				A	None	XW2Z-□□□B	XW2D-40G6-RF*2	None	
				A	None	XW2Z-□□□B	XW2B-40G5	None	---
				A	None	XW2Z-□□□B	XW2B-40G4	None	---
				A	None	XW2Z-□□□BU	XW2D-40C6	None	---
				B	2	XW2Z-□□□D	XW2D-20G6 (2 Units)	None	---
				B	2	XW2Z-□□□D	XW2B-20G5 (2 Units)	None	---
				B	2	XW2Z-□□□D	XW2B-20G4 (2 Units)	None	---
				B	2	XW2Z-□□□D	XW2C-20G6-IO16 (2 Units)	Yes	page A-89
				B	2	XW2Z-□□□D	XW2C-20G5-IN16 (2 Units)*1	Yes	---
				B	2	XW2Z-□□□D	XW2E-20G5-IN16 (2 Units)*1	Yes	---
				B	2	XW2Z-□□□D	XW2F-20G7-IN16 (2 Units)*1	Yes	---
				B	2	XW2Z-□□□D	XW2N-20G8-IN16 (2 Units)*1	Yes	---
CJ1W-ID232	32 inputs	1 MIL connector	NPN/PNP	A	None	XW2Z-□□□K	XW2D-40G6	None	page A-90
				A	None	XW2Z-□□□K	XW2D-40G6-RM*2	None	
				A	None	XW2Z-□□□K	XW2B-40G5	None	---
				A	None	XW2Z-□□□K	XW2B-40G4	None	---
				B	2	XW2Z-□□□N	XW2D-20G6 (2 Units)	None	---
				B	2	XW2Z-□□□N	XW2B-20G5 (2 Units)	None	---
				B	2	XW2Z-□□□N	XW2B-20G4 (2 Units)	None	---
				B	2	XW2Z-□□□N	XW2C-20G6-IO16 (2 Units)	Yes	page A-90
				B	2	XW2Z-□□□N	XW2C-20G5-IN16 (2 Units)*1	Yes	---
				B	2	XW2Z-□□□N	XW2E-20G5-IN16 (2 Units)*1	Yes	---
				B	2	XW2Z-□□□N	XW2F-20G7-IN16 (2 Units)*1	Yes	---
				B	2	XW2Z-□□□N	XW2N-20G8-IN16 (2 Units)*1	Yes	---

Unit	I/O capacity	Number of connectors	Polarity	Connection pattern	Number of branches	Connecting Cable	Connector-Terminal Block Conversion Unit	Common terminal	Connection diagram
CJ1W-ID233	32 inputs	1 MIL connector	NPN/PNP	A	None	XW2Z-□□□K	XW2D-40G6	None	page A-91
				A	None	XW2Z-□□□K	XW2D-40G6-RM*2	None	
				A	None	XW2Z-□□□K	XW2B-40G5	None	---
				A	None	XW2Z-□□□K	XW2B-40G4	None	---
				B	2	XW2Z-□□□N	XW2D-20G6 (2 Units)	None	---
				B	2	XW2Z-□□□N	XW2B-20G5 (2 Units)	None	---
				B	2	XW2Z-□□□N	XW2B-20G4 (2 Units)	None	---
				B	2	XW2Z-□□□N	XW2C-20G6-IO16 (2 Units)	Yes	page A-91
				B	2	XW2Z-□□□N	XW2C-20G5-IN16 (2 Units)*1	Yes	---
				B	2	XW2Z-□□□N	XW2E-20G5-IN16 (2 Units)*1	Yes	---
				B	2	XW2Z-□□□N	XW2F-20G7-IN16 (2 Units)*1	Yes	---
				B	2	XW2Z-□□□N	XW2N-20G8-IN16 (2 Units)*1	Yes	---
CJ1W-ID261	64 inputs	2 Fujitsu / OTAX connectors	NPN/PNP	D	None	XW2Z-□□□B	XW2D-40G6	None	page A-92
				D	None	XW2Z-□□□B	XW2D-40G6-RF*2	None	
				D	None	XW2Z-□□□B	XW2B-40G5	None	---
				D	None	XW2Z-□□□B	XW2B-40G4	None	---
				D	None	XW2Z-□□□BU	XW2D-40C6	None	---
				F	2	XW2Z-□□□D	XW2D-20G6 (2 Units)	None	---
				F	2	XW2Z-□□□D	XW2B-20G5 (2 Units)	None	---
				F	2	XW2Z-□□□D	XW2B-20G4 (2 Units)	None	---
				F	2	XW2Z-□□□D	XW2C-20G6-IO16 (2 Units)	Yes	page A-92
				F	2	XW2Z-□□□D	XW2C-20G5-IN16 (2 Units)*1	Yes	---
				F	2	XW2Z-□□□D	XW2E-20G5-IN16 (2 Units)*1	Yes	---
				F	2	XW2Z-□□□D	XW2F-20G7-IN16 (2 Units)*1	Yes	---
				F	2	XW2Z-□□□D	XW2N-20G8-IN16 (2 Units)*1	Yes	---

Unit	I/O capacity	Number of connectors	Polarity	Connection pattern	Number of branches	Connecting Cable	Connector-Terminal Block Conversion Unit	Common terminal	Connection diagram
CJ1W-ID262	64 inputs	2 MIL connectors	NPN/PNP	D	None	XW2Z-□□□K	XW2D-40G6	None	page A-93
				D	None	XW2Z-□□□K	XW2D-40G6-RM*2	None	
				D	None	XW2Z-□□□K	XW2B-40G5	None	---
				D	None	XW2Z-□□□K	XW2B-40G4	None	---
				F	2	XW2Z-□□□N	XW2D-20G6 (2 Units)	None	---
				F	2	XW2Z-□□□N	XW2B-20G5 (2 Units)	None	---
				F	2	XW2Z-□□□N	XW2B-20G4 (2 Units)	None	---
				F	2	XW2Z-□□□N	XW2C-20G6-IO16 (2 Units)	Yes	page A-93
				F	2	XW2Z-□□□N	XW2C-20G5-IN16 (2 Units)*1	Yes	---
				F	2	XW2Z-□□□N	XW2E-20G5-IN16 (2 Units)*1	Yes	---
				F	2	XW2Z-□□□N	XW2F-20G7-IN16 (2 Units)*1	Yes	---
				F	2	XW2Z-□□□N	XW2N-20G8-IN16 (2 Units)*1	Yes	---
CJ1W-OD231	32 outputs	1 Fujitsu / OTAX connector	NPN	A	None	XW2Z-□□□B	XW2D-40G6	None	page A-94
				A	None	XW2Z-□□□B	XW2B-40G5	None	---
				A	None	XW2Z-□□□B	XW2B-40G4	None	---
				A	None	XW2Z-□□□BU	XW2D-40C6	None	page A-94
				B	2	XW2Z-□□□L	XW2D-20G6 (2 Units)	None	---
				B	2	XW2Z-□□□L	XW2B-20G5 (2 Units)	None	---
				B	2	XW2Z-□□□L	XW2B-20G4 (2 Units)	None	---
				B	2	XW2Z-□□□L	XW2C-20G6-IO16 (2 Units)	Yes	page A-94
				B	2	XW2Z-□□□L	XW2F-20G7-OUT16 (2 Units)	Yes	---
CJ1W-OD232	32 outputs	1 MIL connector	PNP	A	None	XW2Z-□□□K	XW2D-40G6	None	page A-95
				A	None	XW2Z-□□□K	XW2B-40G5	None	---
				A	None	XW2Z-□□□K	XW2B-40G4	None	---
				B	2	XW2Z-□□□N	XW2D-20G6 (2 Units)	None	---
				B	2	XW2Z-□□□N	XW2B-20G5 (2 Units)	None	---
				B	2	XW2Z-□□□N	XW2B-20G4 (2 Units)	None	---
				B	2	XW2Z-□□□N	XW2C-20G6-IO16 (2 Units)	Yes	page A-95
				B	2	XW2Z-□□□N	XW2F-20G7-OUT16 (2 Units)	Yes	---

Unit	I/O capacity	Number of connectors	Polarity	Connection pattern	Number of branches	Connecting Cable	Connector-Terminal Block Conversion Unit	Common terminal	Connection diagram
CJ1W-OD233	32 outputs	1 MIL connector	NPN	A	None	XW2Z-□□□K	XW2D-40G6	None	page A-96
				A	None	XW2Z-□□□K	XW2B-40G5	None	---
				A	None	XW2Z-□□□K	XW2B-40G4	None	---
				B	2	XW2Z-□□□N	XW2D-20G6 (2 Units)	None	---
				B	2	XW2Z-□□□N	XW2B-20G5 (2 Units)	None	---
				B	2	XW2Z-□□□N	XW2B-20G4 (2 Units)	None	---
				B	2	XW2Z-□□□N	XW2C-20G6-IO16 (2 Units)	Yes	page A-96
				B	2	XW2Z-□□□N	XW2F-20G7-OUT16 (2 Units)	Yes	---
CJ1W-OD234	32 outputs	1 MIL connector	NPN	A	None	XW2Z-□□□K	XW2D-40G6	None	page A-97
				A	None	XW2Z-□□□K	XW2B-40G5	None	---
				A	None	XW2Z-□□□K	XW2B-40G4	None	---
				B	2	XW2Z-□□□N	XW2D-20G6 (2 Units)	None	---
				B	2	XW2Z-□□□N	XW2B-20G5 (2 Units)	None	---
				B	2	XW2Z-□□□N	XW2B-20G4 (2 Units)	None	---
				B	2	XW2Z-□□□N	XW2C-20G6-IO16 (2 Units)	Yes	page A-97
				B	2	XW2Z-□□□N	XW2F-20G7-OUT16 (2 Units)	Yes	---
CJ1W-OD261	64 outputs	2 Fujitsu / OTAX connectors	NPN	D	None	XW2Z-□□□B	XW2D-40G6	None	page A-98
				D	None	XW2Z-□□□B	XW2B-40G5	None	---
				D	None	XW2Z-□□□B	XW2B-40G4	None	---
				D	None	XW2Z-□□□BU	XW2D-40C6	None	page A-98
				F	2	XW2Z-□□□L	XW2D-20G6 (2 Units)	None	---
				F	2	XW2Z-□□□L	XW2B-20G5 (2 Units)	None	---
				F	2	XW2Z-□□□L	XW2B-20G4 (2 Units)	None	---
				F	2	XW2Z-□□□L	XW2C-20G6-IO16 (2 Units)	Yes	page A-98
				F	2	XW2Z-□□□L	XW2F-20G7-OUT16 (2 Units)	Yes	---
CJ1W-OD262	64 outputs	2 MIL connectors	PNP	D	None	XW2Z-□□□K	XW2D-40G6	None	page A-99
				D	None	XW2Z-□□□K	XW2B-40G5	None	---
				D	None	XW2Z-□□□K	XW2B-40G4	None	---
				F	2	XW2Z-□□□N	XW2D-20G6 (2 Units)	None	---
				F	2	XW2Z-□□□N	XW2B-20G5 (2 Units)	None	---
				F	2	XW2Z-□□□N	XW2B-20G4 (2 Units)	None	---
				F	2	XW2Z-□□□N	XW2C-20G6-IO16 (2 Units)	Yes	page A-99
				F	2	XW2Z-□□□N	XW2F-20G7-OUT16 (2 Units)	Yes	---

Unit	I/O capacity	Number of connectors	Polarity	Connection pattern	Number of branches	Connecting Cable	Connector-Terminal Block Conversion Unit	Common terminal	Connection diagram
CJ1W-OD263	64 outputs	2 MIL connectors	NPN	D	None	XW2Z-□□□K	XW2D-40G6	None	page A-100
				D	None	XW2Z-□□□K	XW2B-40G5	None	---
				D	None	XW2Z-□□□K	XW2B-40G4	None	---
				F	2	XW2Z-□□□N	XW2D-20G6 (2 Units)	None	---
				F	2	XW2Z-□□□N	XW2B-20G5 (2 Units)	None	---
				F	2	XW2Z-□□□N	XW2B-20G4 (2 Units)	None	---
				F	2	XW2Z-□□□N	XW2C-20G6-IO16 (2 Units)	Yes	page A-100
				F	2	XW2Z-□□□N	XW2F-20G7-OUT16 (2 Units)	Yes	---
CJ1W-MD231	16 inputs	1 Fujitsu / OTAX connector	NPN/PNP	C	None	XW2Z-□□□A	XW2D-20G6	None	page A-101
				C	None	XW2Z-□□□A	XW2B-20G5	None	---
				C	None	XW2Z-□□□A	XW2B-20G4	None	---
				C	None	XW2Z-□□□A	XW2C-20G6-IO16	Yes	page A-102
				C	None	XW2Z-□□□A	XW2C-20G5-IN16*1	Yes	---
				C	None	XW2Z-□□□A	XW2E-20G5-IN16*1	Yes	---
				C	None	XW2Z-□□□A	XW2F-20G7-IN16*1	Yes	---
				C	None	XW2Z-□□□A	XW2N-20G8-IN16*1	Yes	---
	16 outputs	1 Fujitsu / OTAX connector	NPN	C	None	XW2Z-□□□A	XW2D-20G6	None	page A-101
				C	None	XW2Z-□□□A	XW2B-20G5	None	---
				C	None	XW2Z-□□□A	XW2B-20G4	None	---
				C	None	XW2Z-□□□A	XW2C-20G6-IO16	Yes	page A-102
				C	None	XW2Z-□□□A	XW2F-20G7-OUT16	Yes	---
CJ1W-MD232	16 inputs	1 MIL connector	NPN/PNP	C	None	XW2Z-□□□X	XW2D-20G6	None	page A-103
				C	None	XW2Z-□□□X	XW2B-20G5	None	---
				C	None	XW2Z-□□□X	XW2B-20G4	None	---
	16 outputs	1 MIL connector	PNP	C	None	XW2Z-□□□X	XW2D-20G6	None	page A-103
				C	None	XW2Z-□□□X	XW2B-20G5	None	---
				C	None	XW2Z-□□□X	XW2B-20G4	None	---
CJ1W-MD233	16 inputs	1 MIL connector	NPN/PNP	C	None	XW2Z-□□□X	XW2D-20G6	None	page A-103
				C	None	XW2Z-□□□X	XW2B-20G5	None	---
				C	None	XW2Z-□□□X	XW2B-20G4	None	---
	16 outputs	1 MIL connector	NPN	C	None	XW2Z-□□□X	XW2D-20G6	None	page A-103
				C	None	XW2Z-□□□X	XW2B-20G5	None	---
				C	None	XW2Z-□□□X	XW2B-20G4	None	---

Unit	I/O capacity	Number of connectors	Polarity	Connection pattern	Number of branches	Connecting Cable	Connector-Terminal Block Conversion Unit	Common terminal	Connection diagram
CJ1W-MD261	32 inputs	1 Fujitsu / OTAX connector	NPN/PNP	D	None	XW2Z-□□□B	XW2D-40G6	None	page A-104
				D	None	XW2Z-□□□B	XW2D-40G6-RF*2	None	
				D	None	XW2Z-□□□B	XW2B-40G5	None	---
				D	None	XW2Z-□□□B	XW2B-40G4	None	---
				D	None	XW2Z-□□□BU	XW2D-40C6	None	---
				F	2	XW2Z-□□□D	XW2D-20G6 (2 Units)	None	---
				F	2	XW2Z-□□□D	XW2B-20G5 (2 Units)	None	---
				F	2	XW2Z-□□□D	XW2B-20G4 (2 Units)	None	---
				F	2	XW2Z-□□□D	XW2C-20G6-IO16 (2 Units)	Yes	page A-105
				F	2	XW2Z-□□□D	XW2C-20G5-IN16 (2 Units)*1	Yes	---
				F	2	XW2Z-□□□D	XW2E-20G5-IN16 (2 Units)*1	Yes	---
				F	2	XW2Z-□□□D	XW2F-20G7-IN16 (2 Units)*1	Yes	---
				F	2	XW2Z-□□□D	XW2N-20G8-IN16 (2 Units)*1	Yes	---
	32 outputs	1 Fujitsu / OTAX connector	NPN	D	None	XW2Z-□□□B	XW2D-40G6	None	page A-104
				D	None	XW2Z-□□□B	XW2B-40G5	None	---
				D	None	XW2Z-□□□B	XW2B-40G4	None	---
				D	None	XW2Z-□□□BU	XW2D-40C6	None	---
				F	2	XW2Z-□□□L	XW2D-20G6 (2 Units)	None	---
				F	2	XW2Z-□□□L	XW2B-20G5 (2 Units)	None	---
				F	2	XW2Z-□□□L	XW2B-20G4 (2 Units)	None	---
				F	2	XW2Z-□□□L	XW2C-20G6-IO16 (2 Units)	Yes	page A-105
				F	2	XW2Z-□□□L	XW2F-20G7-OUT16 (2 Units)	Yes	---

Unit	I/O capacity	Number of connectors	Polarity	Connection pattern	Number of branches	Connecting Cable	Connector-Terminal Block Conversion Unit	Common terminal	Connection diagram
CJ1W-MD263	32 inputs	1 MIL connector	NPN/PNP	D	None	XW2Z-□□□K	XW2D-40G6	None	page A-106
				D	None	XW2Z-□□□K	XW2D-40G6-RM*2	None	
				D	None	XW2Z-□□□K	XW2B-40G5	None	---
				D	None	XW2Z-□□□K	XW2B-40G4	None	---
				F	2	XW2Z-□□□N	XW2D-20G6 (2 Units)	None	---
				F	2	XW2Z-□□□N	XW2B-20G5 (2 Units)	None	---
				F	2	XW2Z-□□□N	XW2B-20G4 (2 Units)	None	---
				F	2	XW2Z-□□□N	XW2C-20G6-IO16 (2 Units)	Yes	page A-107
				F	2	XW2Z-□□□N	XW2C-20G5-IN16 (2 Units)*1	Yes	---
				F	2	XW2Z-□□□N	XW2E-20G5-IN16 (2 Units)*1	Yes	---
				F	2	XW2Z-□□□N	XW2F-20G7-IN16 (2 Units)*1	Yes	---
				F	2	XW2Z-□□□N	XW2N-20G8-IN16 (2 Units)*1	Yes	---
	32 outputs	1 MIL connector	NPN	D	None	XW2Z-□□□K	XW2D-40G6	None	page A-106
				D	None	XW2Z-□□□K	XW2B-40G5	None	---
				D	None	XW2Z-□□□K	XW2B-40G4	None	---
				F	2	XW2Z-□□□N	XW2D-20G6 (2 Units)	None	---
				F	2	XW2Z-□□□N	XW2B-20G5 (2 Units)	None	---
				F	2	XW2Z-□□□N	XW2B-20G4 (2 Units)	None	---
				F	2	XW2Z-□□□N	XW2C-20G6-IO16 (2 Units)	Yes	page A-107
				F	2	XW2Z-□□□N	XW2F-20G7-OUT16 (2 Units)	Yes	---
CJ1W-MD563	32 inputs	1 MIL connector	NPN/PNP	D	None	XW2Z-□□□K	XW2D-40G6	None	page A-108
				D	None	XW2Z-□□□K	XW2D-40G6-RM*2	None	
				D	None	XW2Z-□□□K	XW2B-40G5	None	---
				D	None	XW2Z-□□□K	XW2B-40G4	None	---
				F	2	XW2Z-□□□N	XW2D-20G6 (2 Units)	None	---
				F	2	XW2Z-□□□N	XW2B-20G5 (2 Units)	None	---
				F	2	XW2Z-□□□N	XW2B-20G4 (2 Units)	None	---
	32 outputs	1 MIL connector	NPN	D	None	XW2Z-□□□K	XW2D-40G6	None	page A-108
				D	None	XW2Z-□□□K	XW2B-40G5	None	---
				D	None	XW2Z-□□□K	XW2B-40G4	None	---
				F	2	XW2Z-□□□N	XW2D-20G6 (2 Units)	None	---
				F	2	XW2Z-□□□N	XW2B-20G5 (2 Units)	None	---
				F	2	XW2Z-□□□N	XW2B-20G4 (2 Units)	None	---

*1. The inputs are NPN. For PNP inputs, reverse the polarity of the external power supply connections to the power supply terminals on the Connector-Terminal Block Conversion Unit.

*2. Bleeder resistance (5.6 kΩ) is built in.

● Connections to I/O Relay Terminals

Unit	I/O capacity	Number of connectors	Polarity	Connection pattern	Number of branches	Connecting Cable	I/O Relay Terminal	Connection diagram
CJ1W-ID231	32 inputs	1 Fujitsu / OTAX connector	NPN	A	2	XW2Z-RI□C-□	G7TC-ID16	page A-109
				A	2	XW2Z-RI□C-□	G7TC-IA16	
CJ1W-ID232	32 inputs	1 MIL connector	NPN	A	2	XW2Z-RO□-□-D1	G7TC-ID16	
				A	2	XW2Z-RO□-□-D1	G7TC-IA16	
CJ1W-ID233	32 inputs	1 MIL connector	NPN	A	2	XW2Z-RO□C-□	G7TC-ID16	
				A	2	XW2Z-RO□-□-D1	G7TC-IA16	
CJ1W-ID261	64 inputs	2 Fujitsu / OTAX connectors	NPN	B	2	XW2Z-RI□C-□	G7TC-ID16	
				B	2	XW2Z-RI□C-□	G7TC-IA16	
CJ1W-ID262	64 inputs	2 MIL connectors	NPN	B	2	XW2Z-RO□-□-D1	G7TC-ID16	
				B	2	XW2Z-RO□-□-D1	G7TC-IA16	
CJ1W-OD231	32 outputs	1 Fujitsu / OTAX connector	NPN	A	2	XW2Z-RO□C-□	G7TC-OC16	page A-112
				A	2	XW2Z-RO□C-□	G7TC-OC08	
				A	2	XW2Z-RO□C-□	G70D-SOC16	page A-111
				A	2	XW2Z-RO□C-□	G70D-FOM16	---
				A	2	XW2Z-RO□C-□	G70D-VSOC16	page A-110
				A	2	XW2Z-RO□C-□	G70D-VFOM16	---
				A	2	XW2Z-RO□C-□	G70A-ZOC16-3 and Relay	page A-113
				A	2	XW2Z-RO□C-□	G70R-SOC08	page A-112
				A	2	XW2Z-RO□C-□	G70D-SOC08	page A-111
CJ1W-OD232	32 outputs	1 MIL connector	PNP	A	2	XW2Z-RI□-□-D1	G7TC-OC16-1	page A-113
				A	2	XW2Z-RO□-□-D1	G70D-SOC16-1	---
				A	2	XW2Z-RO□-□-D1	G70D-FOM16-1	---
				A	2	XW2Z-RO□-□-D1	G70A-ZOC16-4 and Relay	---

Unit	I/O capacity	Number of connectors	Polarity	Connection pattern	Number of branches	Connecting Cable	I/O Relay Terminal	Connection diagram
CJ1W-OD233	32 outputs	1 MIL connector	NPN	A	2	XW2Z-RO□-□-D1	G7TC-OC16	page A-112
				A	2	XW2Z-RO□-□-D1	G7TC-OC08	
				A	2	XW2Z-RO□-□-D1	G70D-SOC16	page A-111
				A	2	XW2Z-RO□-□-D1	G70D-FOM16	---
				A	2	XW2Z-RO□-□-D1	G70D-VSOC16	page A-110
				A	2	XW2Z-RO□-□-D1	G70D-VFOM16	---
				A	2	XW2Z-RO□-□-D1	G70A-ZOC16-3 and Relay	page A-113
				A	2	XW2Z-RO□-□-D1	G70R-SOC08	page A-112
				A	2	XW2Z-RO□-□-D1	G70D-SOC08	page A-111
CJ1W-OD234	32 outputs	1 MIL connector	NPN	A	2	XW2Z-RO□-□-D1	G7TC-OC16	page A-112
				A	2	XW2Z-RO□-□-D1	G7TC-OC08	
				A	2	XW2Z-RO□-□-D1	G70D-SOC16	page A-111
				A	2	XW2Z-RO□-□-D1	G70D-FOM16	---
				A	2	XW2Z-RO□-□-D1	G70D-VSOC16	page A-110
				A	2	XW2Z-RO□-□-D1	G70D-VFOM16	---
				A	2	XW2Z-RO□-□-D1	G70A-ZOC16-3 and Relay	page A-113
				A	2	XW2Z-RO□-□-D1	G70R-SOC08	page A-112
				A	2	XW2Z-RO□-□-D1	G70D-SOC08	page A-111
CJ1W-OD261	64 outputs	2 Fujitsu / OTAX connectors	NPN	B	2	XW2Z-RO□C-□	G7TC-OC16	page A-112
				B	2	XW2Z-RO□C-□	G7TC-OC08	
				B	2	XW2Z-RO□C-□	G70D-SOC16	page A-111
				B	2	XW2Z-RO□C-□	G70D-FOM16	---
				B	2	XW2Z-RO□C-□	G70D-VSOC16	page A-110
				B	2	XW2Z-RO□C-□	G70D-VFOM16	---
				B	2	XW2Z-RO□C-□	G70A-ZOC16-3 and Relay	page A-113
				B	2	XW2Z-RO□C-□	G70R-SOC08	page A-112
				B	2	XW2Z-RO□C-□	G70D-SOC08	page A-111
CJ1W-OD262	64 outputs	2 MIL connectors	PNP	B	2	XW2Z-RI□-□-D1	G7TC-OC16-1	page A-113
				B	2	XW2Z-RO□-□-D1	G70D-SOC16-1	---
				B	2	XW2Z-RO□-□-D1	G70D-FOM16-1	---
				B	2	XW2Z-RO□-□-D1	G70A-ZOC16-4 and Relay	---

Unit	I/O capacity	Number of connectors	Polarity	Connection pattern	Number of branches	Connecting Cable	I/O Relay Terminal	Connection diagram
CJ1W-OD263	64 outputs	2 MIL connectors	NPN	B	2	XW2Z-RO□-□-D1	G7TC-OC16	page A-112
				B	2	XW2Z-RO□-□-D1	G7TC-OC08	
				B	2	XW2Z-RO□-□-D1	G70D-SOC16	page A-111
				B	2	XW2Z-RO□-□-D1	G70D-FOM16	---
				B	2	XW2Z-RO□-□-D1	G70D-VSOC16	page A-110
				B	2	XW2Z-RO□-□-D1	G70D-VFOM16	---
				B	2	XW2Z-RO□-□-D1	G70A-ZOC16-3 and Relay	page A-113
				B	2	XW2Z-RO□-□-D1	G70R-SOC08	page A-112
				B	2	XW2Z-RO□-□-D1	G70D-SOC08	page A-111
CJ1W-MD231	16 inputs	1 Fujitsu / OTAX connector	NPN	F	None	XW2Z-R□C	G7TC-ID16	page A-109
				F	None	XW2Z-R□C	G7TC-IA16	
	16 outputs	1 Fujitsu / OTAX connector	NPN	F	None	XW2Z-R□C	G7TC-OC16	page A-112
				F	None	XW2Z-R□C	G7TC-OC08	
				F	None	XW2Z-R□C	G70D-SOC16	page A-111
				F	None	XW2Z-R□C	G70D-FOM16	---
				F	None	XW2Z-R□C	G70D-VSOC16	page A-110
				F	None	XW2Z-R□C	G70D-VFOM16	---
				F	None	XW2Z-R□C	G70A-ZOC16-3 and Relay	page A-113
				F	None	XW2Z-R□C	G70R-SOC08	page A-112
				F	None	XW2Z-R□C	G70D-SOC08	page A-111
CJ1W-MD232	16 outputs	1 MIL connector	PNP	F	None	XW2Z-RO□C	G7TC-OC16-1	page A-113
				F	None	XW2Z-RI□C	G70D-SOC16-1	---
				F	None	XW2Z-RI□C	G70D-FOM16-1	---
				F	None	XW2Z-RI□C	G70A-ZOC16-4 and Relay	---

Unit	I/O capacity	Number of connectors	Polarity	Connection pattern	Number of branches	Connecting Cable	I/O Relay Terminal	Connection diagram
CJ1W-MD233	16 inputs	1 MIL connector	NPN	E	None	XW2Z-RO□C	G7TC-ID16	page A-109
				E	None	XW2Z-RO□C	G7TC-IA16	
	16 outputs	1 MIL connector	NPN	E	None	XW2Z-RO□C	G7TC-OC16	page A-112
				E	None	XW2Z-RO□C	G7TC-OC08	
				E	None	XW2Z-RO□C	G70D-SOC16	page A-111
				E	None	XW2Z-RO□C	G70D-FOM16	---
				E	None	XW2Z-RO□C	G70D-VSOC16	page A-110
				E	None	XW2Z-RO□C	G70D-VFOM16	---
				E	None	XW2Z-RO□C	G70A-ZOC16-3 and Relay	page A-113
				E	None	XW2Z-RO□C	G70R-SOC08	page A-112
				E	None	XW2Z-RO□C	G70D-SOC08	page A-111
CJ1W-MD261	32 inputs	1 Fujitsu / OTAX connector	NPN	B	2	XW2Z-RI□C-□	G7TC-ID16	page A-109
				B	2	XW2Z-RI□C-□	G7TC-IA16	
	32 outputs	1 Fujitsu / OTAX connector	NPN	B	2	XW2Z-RO□C-□	G7TC-OC16	page A-112
				B	2	XW2Z-RO□C-□	G7TC-OC08	
				B	2	XW2Z-RO□C-□	G70D-SOC16	page A-111
				B	2	XW2Z-RO□C-□	G70D-FOM16	---
				B	2	XW2Z-RO□C-□	G70D-VSOC16	page A-110
				B	2	XW2Z-RO□C-□	G70D-VFOM16	---
				B	2	XW2Z-RO□C-□	G70A-ZOC16-3 and Relay	page A-113
				B	2	XW2Z-RO□C-□	G70R-SOC08	page A-112
				B	2	XW2Z-RO□C-□	G70D-SOC08	page A-111

Unit	I/O capacity	Number of connectors	Polarity	Connection pattern	Number of branches	Connecting Cable	I/O Relay Terminal	Connection diagram
CJ1W-MD263	32 inputs	1 MIL connector	NPN	B	2	XW2Z-RO□-□-D1	G7TC-ID16	page A-109
				B	2	XW2Z-RO□-□-D1	G7TC-IA16	
	32 outputs	1 MIL connector	NPN	B	2	XW2Z-RO□-□-D1	G7TC-OC16	page A-112
				B	2	XW2Z-RO□-□-D1	G7TC-OC08	
				B	2	XW2Z-RO□-□-D1	G70D-SOC16	page A-111
				B	2	XW2Z-RO□-□-D1	G70D-FOM16	---
				B	2	XW2Z-RO□-□-D1	G70D-VSOC16	page A-110
				B	2	XW2Z-RO□-□-D1	G70D-VFOM16	---
				B	2	XW2Z-RO□-□-D1	G70A-ZOC16-3 and Relay	page A-113
				B	2	XW2Z-RO□-□-D1	G70R-SOC08	page A-112
				B	2	XW2Z-RO□-□-D1	G70D-SOC08	page A-111

Connector-Terminal Block Conversion Unit Connection Diagrams

The applicable terminals on the Connector-Terminal Block Conversion Unit and external connection diagrams are provided below for Basic I/O Unit connections to Connector-Terminal Block Conversion Units.

● Inputs

Programmable Controller I/O Unit	**CJ1W-ID231**
Connector-Terminal Block Conversion Unit	**XW2D-40G6** **XW2D-40G6-RF**
Connecting Cables	**XW2Z-□□□B**
Connection diagram	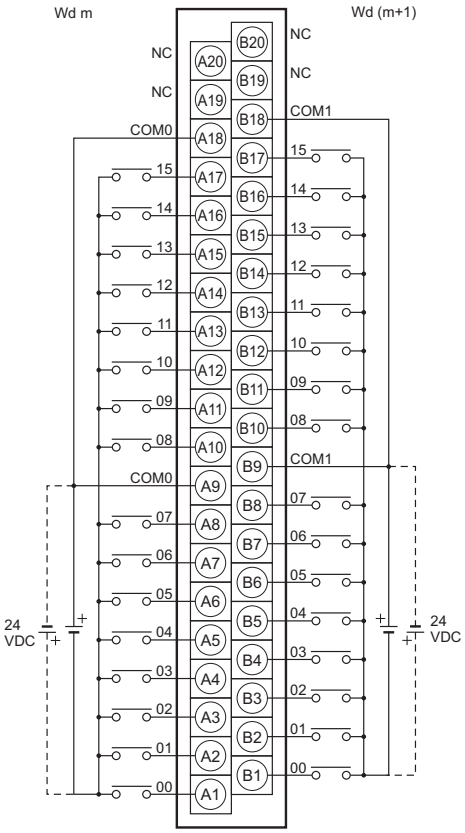

Note 1. The polarity for input power supply connections indicated with dotted lines (- - - - -) can be connected in either direction provided that the same polarity is used for the commons for rows A and B.

Note 2. Both COM0 and COM1 have two pins each. They are internally connected inside the Controller, but they must all be wired.

Programmable Controller I/O Unit	**CJ1W-ID231**
Connector-Terminal Block Conversion Unit	**XW2C-20G6-IO16 (2 Units)**
Connecting Cables	**XW2Z-□□□D**
Connection diagram	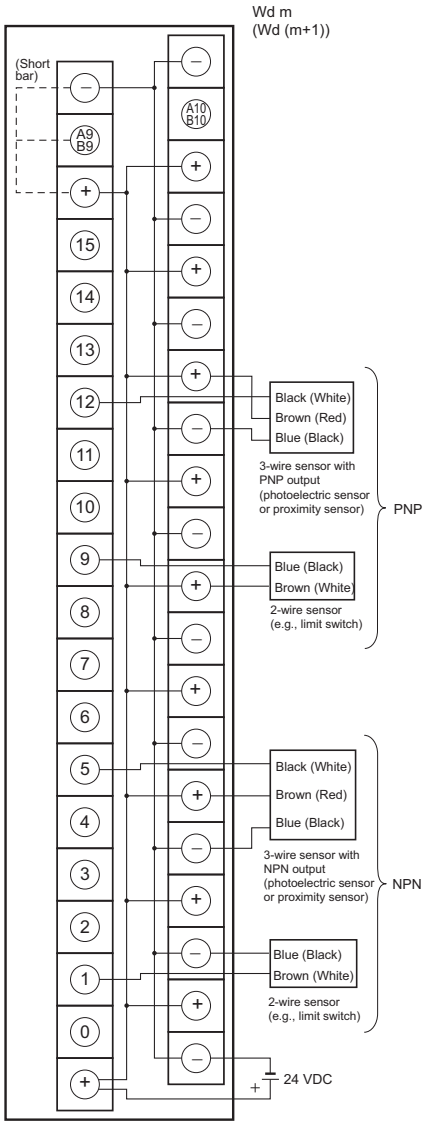

Note 1. Connect the A9/B9 terminal and the ⊕ terminal for NPN.
Connect the A9/B9 terminal and the ⊖ terminal for PNP. (Use the enclosed short bar.)

Note 2. The COM terminals are wired inside the Connector-Terminal Block Conversion Unit.

Programmable Controller I/O Unit	**CJ1W-ID232**
Connector-Terminal Block Conversion Unit	**XW2D-40G6** **XW2D-40G6-RM**
Connecting Cables	**XW2Z-□□□K**
Connection diagram	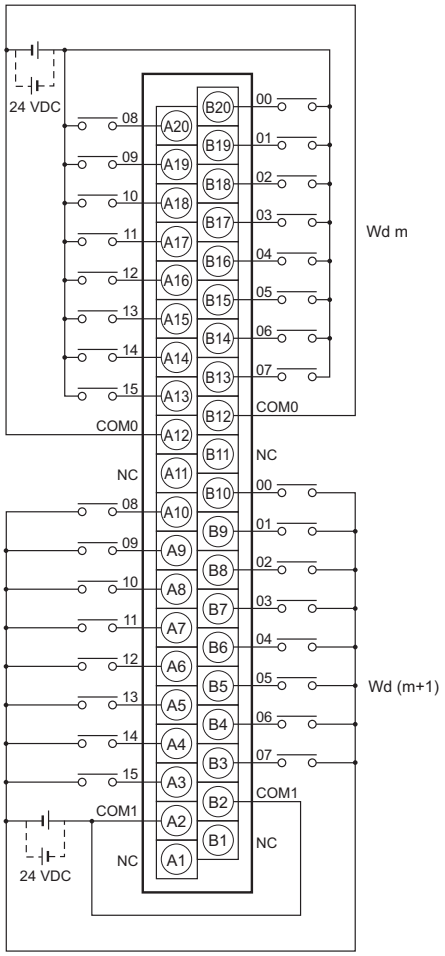

Note 1. The polarity for input power supply connections indicated with dotted lines (- - - - -) can be connected in either direction provided that the same polarity is used for the commons.

Note 2. Both COM0 and COM1 have two pins each. They are internally connected inside the Controller, but they must all be wired.

Programmable Controller I/O Unit	**CJ1W-ID232**
Connector-Terminal Block Conversion Unit	**XW2C-20G6-IO16 (2 Units)**
Connecting Cables	**XW2Z-□□□N**
Connection diagram	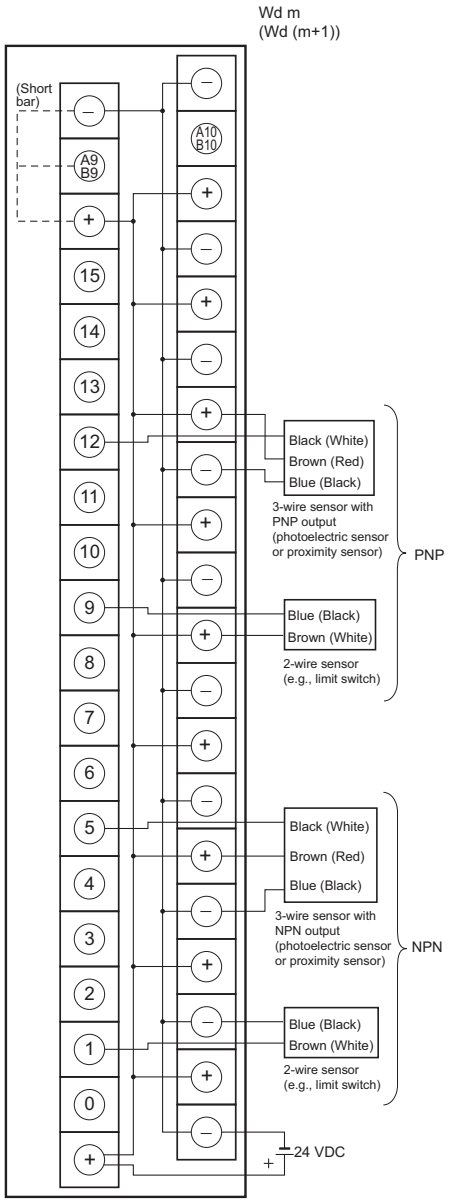

Note 1. Connect the A9/B9 terminal and the ⊕ terminal for NPN.
Connect the A9/B9 terminal and the ⊖ terminal for PNP.
(Use the enclosed short bar.)

Note 2. The COM terminals are wired inside the Connector-Terminal Block Conversion Unit.

Programmable Controller I/O Unit	**CJ1W-ID233**
Connector-Terminal Block Conversion Unit	**XW2D-40G6** **XW2D-40G6-RM**
Connecting Cables	**XW2Z-□□□K**
Connection diagram	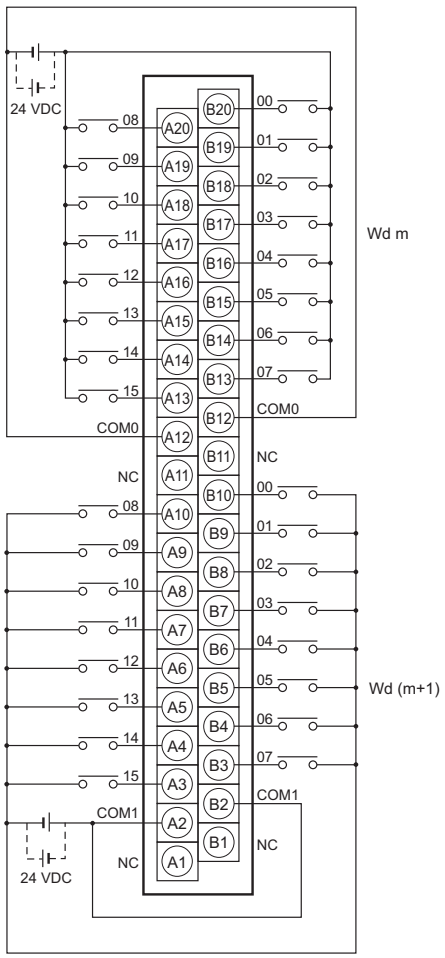

Note 1. The polarity for input power supply connections indicated with dotted lines (- - - - -) can be connected in either direction provided that the same polarity is used for the commons.

Note 2. Both COM0 and COM1 have two pins each. They are internally connected inside the Controller, but they must all be wired.

Programmable Controller I/O Unit	**CJ1W-ID233**
Connector-Terminal Block Conversion Unit	**XW2C-20G6-IO16 (2 Units)**
Connecting Cables	**XW2Z-□□□N**
Connection diagram	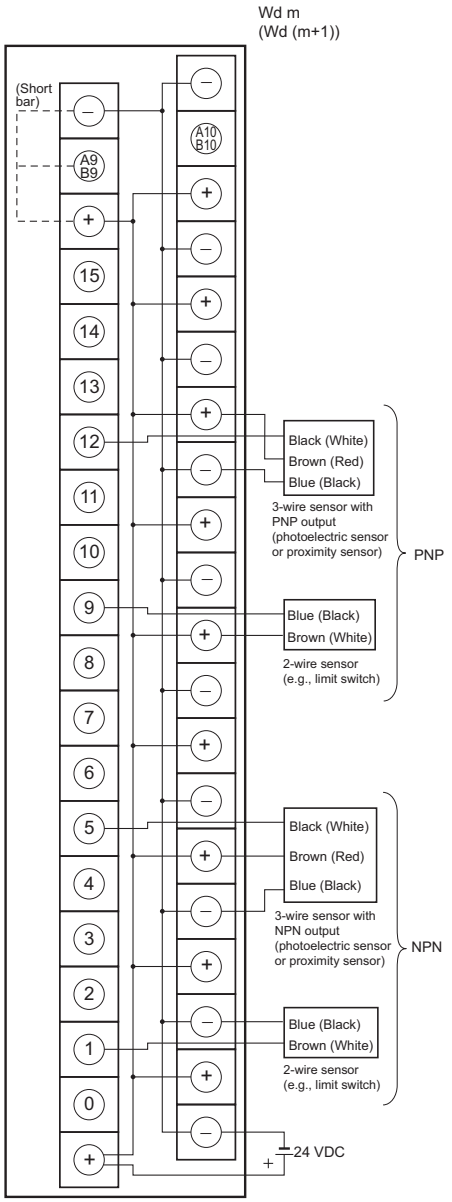

Note 1. Connect the A9/B9 terminal and the ⊕ terminal for NPN.
Connect the A9/B9 terminal and the ⊖ terminal for PNP.
(Use the enclosed short bar.)

Note 2. The COM terminals are wired inside the Connector-Terminal Block Conversion Unit.

Programmable Controller I/O Unit	**CJ1W-ID261**
Connector-Terminal Block Conversion Unit	**XW2D-40G6** **XW2D-40G6-RF**
Connecting Cables	**XW2Z-□□□B**
Connection diagram	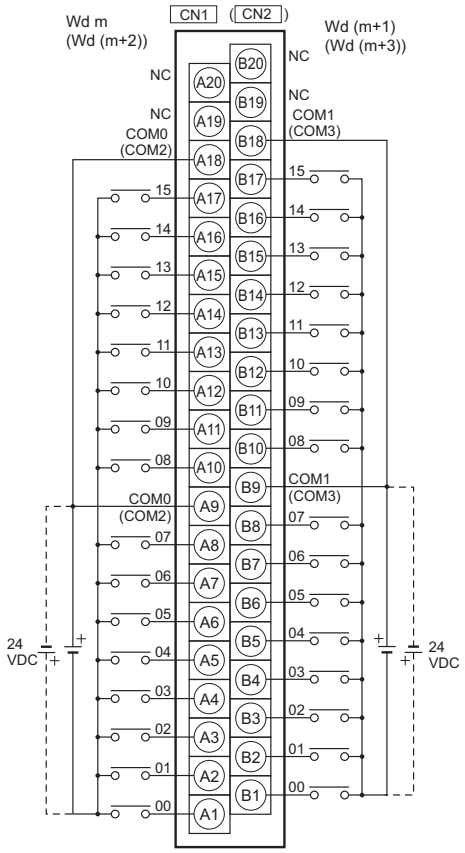

Note 1. The polarity for input power supply connections indicated with dotted lines (- - - - -) can be connected in either direction provided that the same polarity is used for the commons for rows A and B.

Note 2. COM0, COM1, COM2, and COM3 have two pins each. They are internally connected inside the Controller, but they must all be wired.

Programmable Controller I/O Unit	**CJ1W-ID261**
Connector-Terminal Block Conversion Unit	**XW2C-20G6-IO16 (2 Units)**
Connecting Cables	**XW2Z-□□□D**
Connection diagram	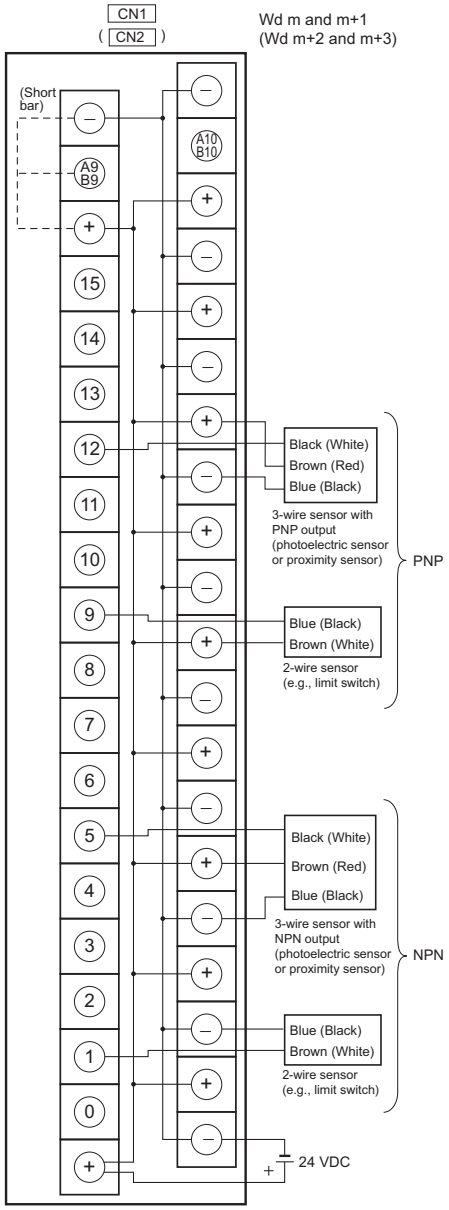

Note 1. Connect the A9/B9 terminal and the ⊕ terminal for NPN.
Connect the A9/B9 terminal and the ⊖ terminal for PNP.
(Use the enclosed short bar.)

Note 2. The COM terminals are wired inside the Connector-Terminal Block Conversion Unit.

Programmable Controller I/O Unit	**CJ1W-ID262**
Connector-Terminal Block Conversion Unit	**XW2D-40G6** **XW2D-40G6-RM**
Connecting Cables	**XW2Z-□□□K**
Connection diagram	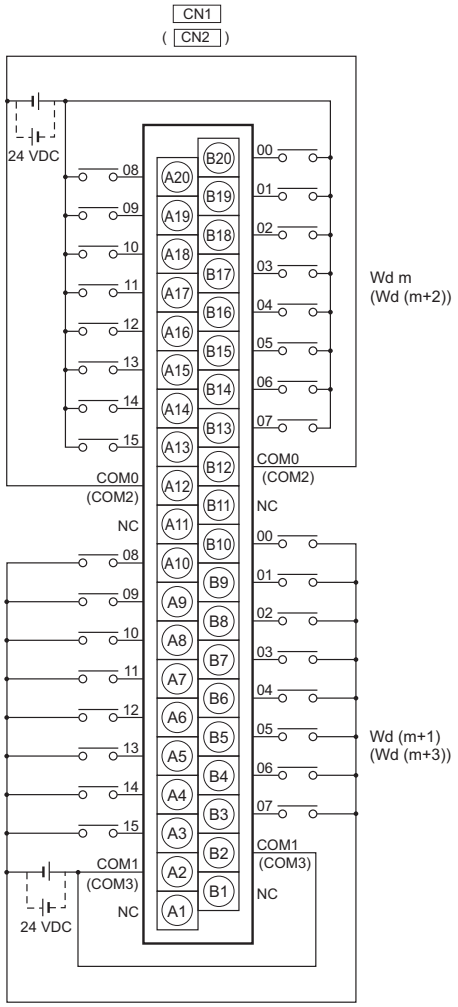

Note 1. The polarity for input power supply connections indicated with dotted lines (- - - - - -) can be connected in either direction provided that the same polarity is used for the commons.

Note 2. COM0, COM1, COM2, and COM3 have two pins each. They are internally connected inside the Controller, but they must all be wired.

Programmable Controller I/O Unit	**CJ1W-ID262**
Connector-Terminal Block Conversion Unit	**XW2C-20G6-IO16 (2 Units)**
Connecting Cables	**XW2Z-□□□N**
Connection diagram	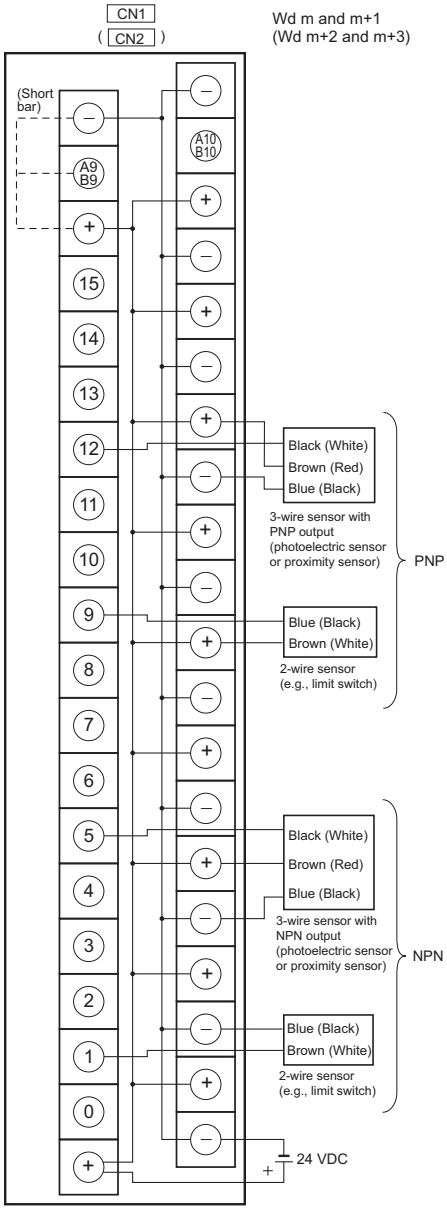

Note 1. Connect the A9/B9 terminal and the ⊕ terminal for NPN.
Connect the A9/B9 terminal and the ⊖ terminal for PNP.
(Use the enclosed short bar.)

Note 2. The COM terminals are wired inside the Connector-Terminal Block Conversion Unit.

● Outputs

Programmable Controller I/O Unit	**CJ1W-OD231**
Connector-Terminal Block Conversion Unit	**XW2D-40G6** **XW2D-40C6**
Connecting Cables	**XW2Z-□□□B** **XW2Z-□□□BU**
Connection diagram	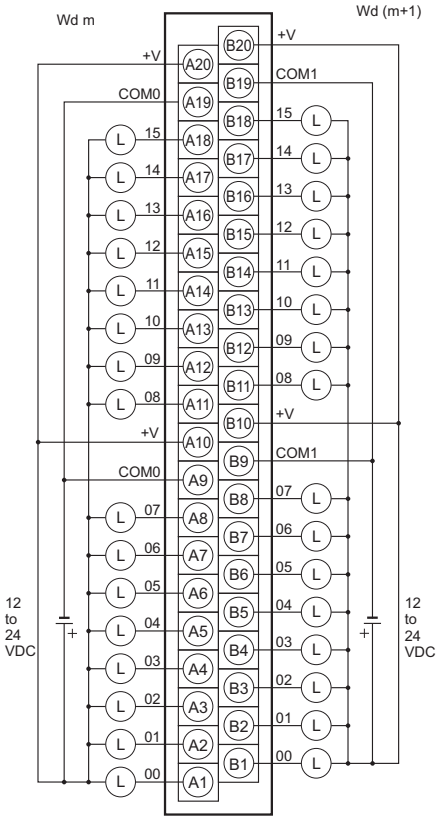

Note The +V terminals and COM terminals are internally connected inside the Controller, but they must all be wired.

Programmable Controller I/O Unit	**CJ1W-OD231**
Connector-Terminal Block Conversion Unit	**XW2C-20G6-IO16 (2 Units)**
Connecting Cables	**XW2Z-□□□L**
Connection diagram	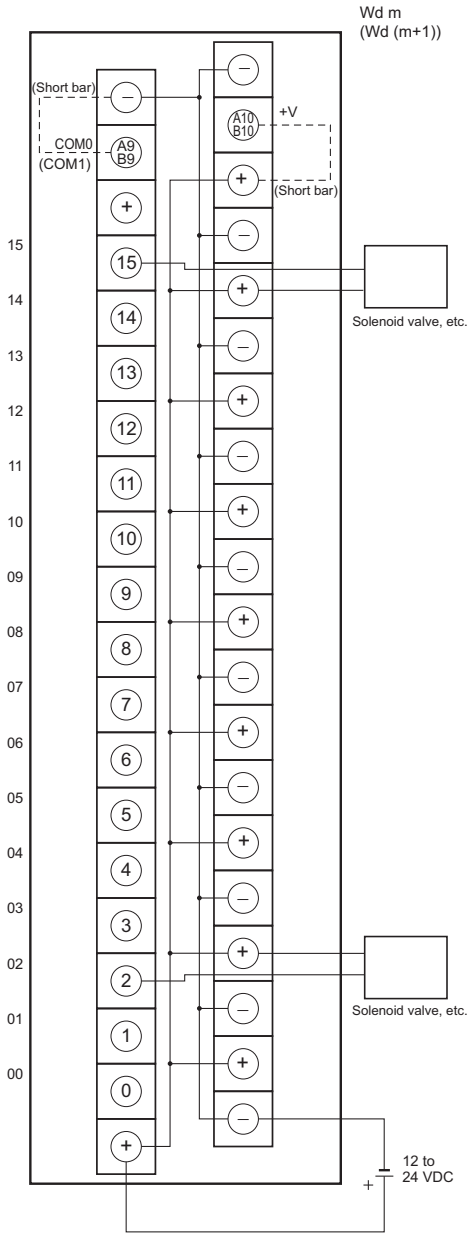

Note 1. Connect the A9/B9 terminal and the ⊖ terminal.
Connect the A10/B10 terminal and the ⊕ terminal.
(Use the enclosed short bar.)

Note 2. The COM terminals are wired inside the Connector-Terminal Block Conversion Unit.

Programmable Controller I/O Unit	**CJ1W-OD232**
Connector-Terminal Block Conversion Unit	**XW2D-40G6**
Connecting Cables	**XW2Z-□□□K**
Connection diagram	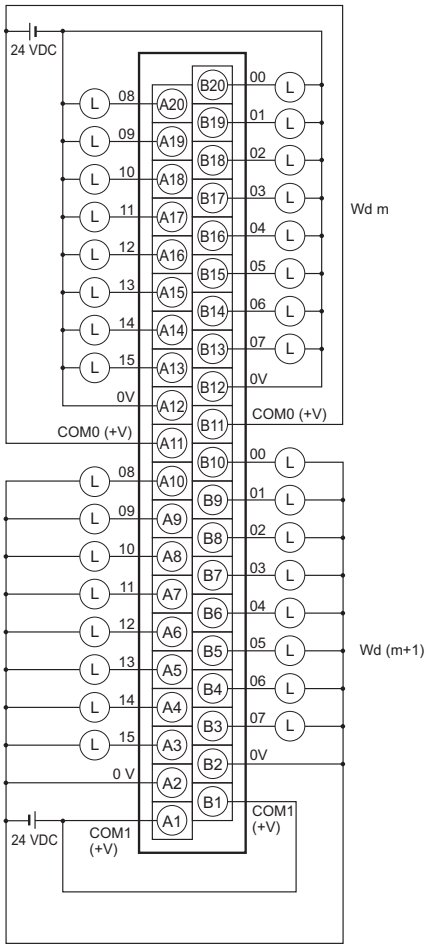

Note The COM (+V) terminals and 0V terminals are internally connected inside the Controller, but they must all be wired.

Programmable Controller I/O Unit	**CJ1W-OD232**
Connector-Terminal Block Conversion Unit	**XW2C-20G6-IO16 (2 Units)**
Connecting Cables	**XW2Z-□□□N**
Connection diagram	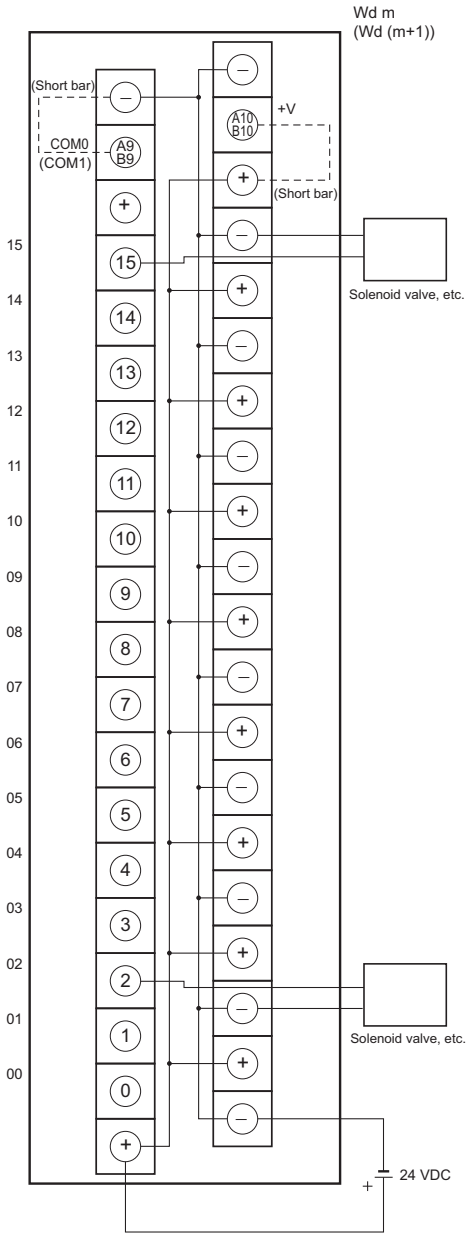

Note 1. Connect the A9/B9 terminal and the ⊖ terminal.
Connect the A10/B10 terminal and the ⊕ terminal.
(Use the enclosed short bar.)

Note 2. The COM terminals are wired inside the Connector-Terminal Block Conversion Unit.

Programmable Controller I/O Unit	**CJ1W-OD233**
Connector-Terminal Block Conversion Unit	**XW2D-40G6**
Connecting Cables	**XW2Z-□□□K**
Connection diagram	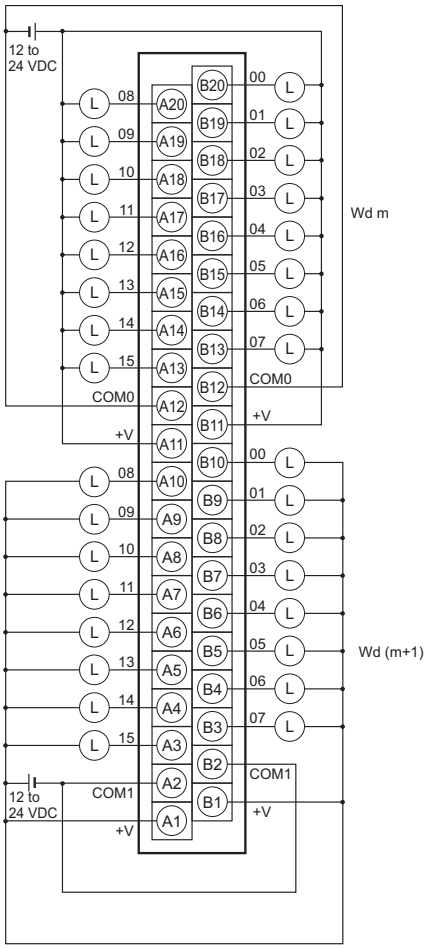

Note The +V terminals and COM terminals are internally connected inside the Controller, but they must all be wired.

Programmable Controller I/O Unit	**CJ1W-OD233**
Connector-Terminal Block Conversion Unit	**XW2C-20G6-IO16 (2 Units)**
Connecting Cables	**XW2Z-□□□N**
Connection diagram	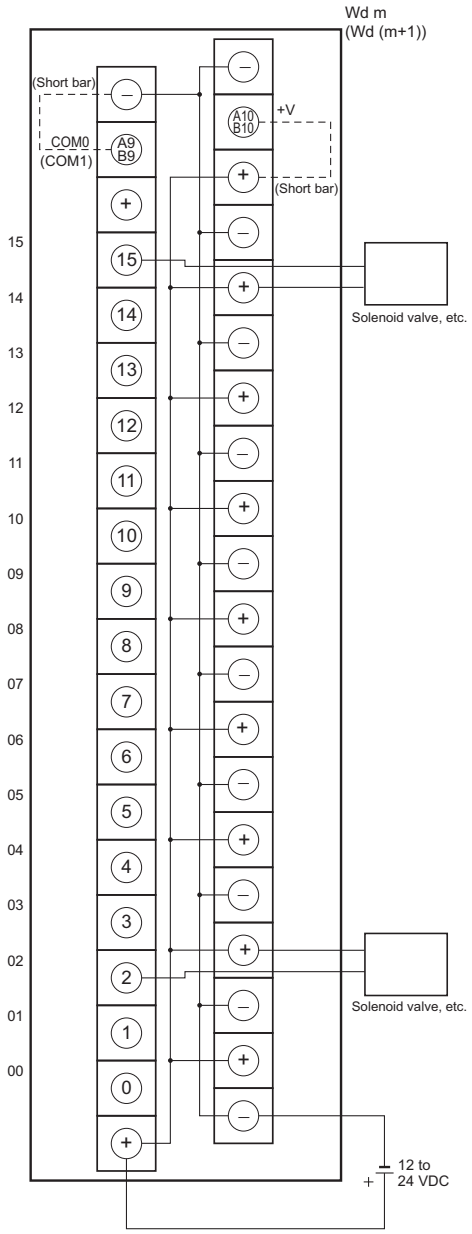

Note 1. Connect the A9/B9 terminal and the ⊖ terminal.
Connect the A10/B10 terminal and the ⊕ terminal.
(Use the enclosed short bar.)

Note 2. The COM terminals are wired inside the Connector-Terminal Block Conversion Unit.

Programmable Controller I/O Unit	**CJ1W-OD234**
Connector-Terminal Block Conversion Unit	**XW2D-40G6**
Connecting Cables	**XW2Z-□□□K**
Connection diagram	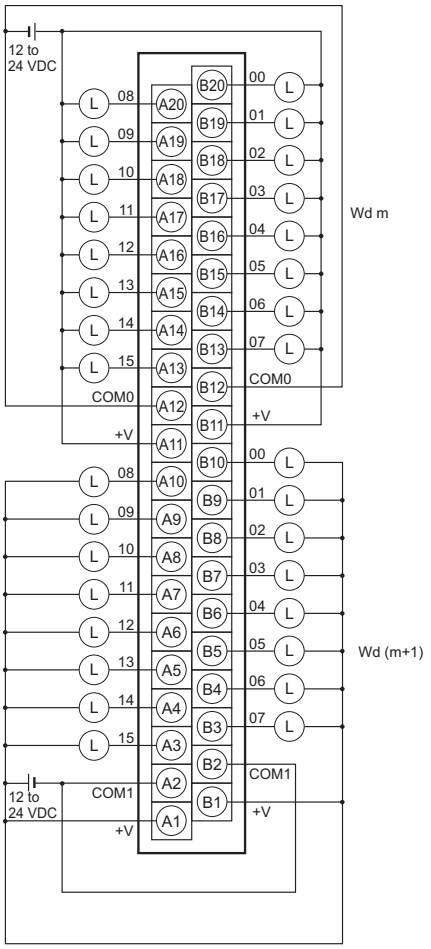

Note The +V terminals and COM terminals are internally connected inside the Controller, but they must all be wired.

Programmable Controller I/O Unit	**CJ1W-OD234**
Connector-Terminal Block Conversion Unit	**XW2C-20G6-IO16 (2 Units)**
Connecting Cables	**XW2Z-□□□N**
Connection diagram	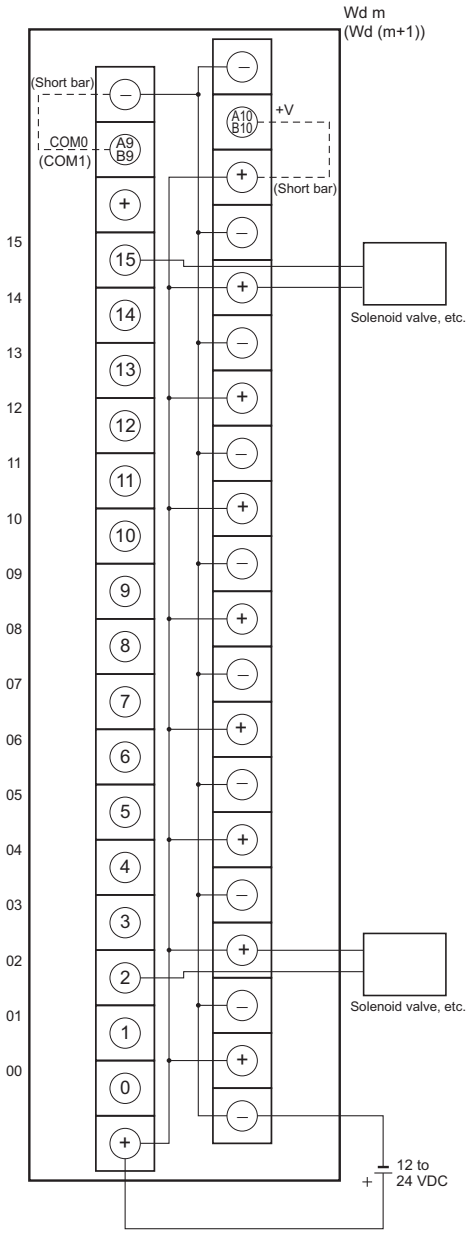

Note 1. Connect the A9/B9 terminal and the ⊖ terminal. Connect the A10/B10 terminal and the ⊕ terminal. (Use the enclosed short bar.)

Note 2. The COM terminals are wired inside the Connector-Terminal Block Conversion Unit.

Programmable Controller I/O Unit	**CJ1W-OD261**
Connector-Terminal Block Conversion Unit	**XW2D-40G6** **XW2D-40C6**
Connecting Cables	**XW2Z-□□□B** **XW2Z-□□□BU**
Connection diagram	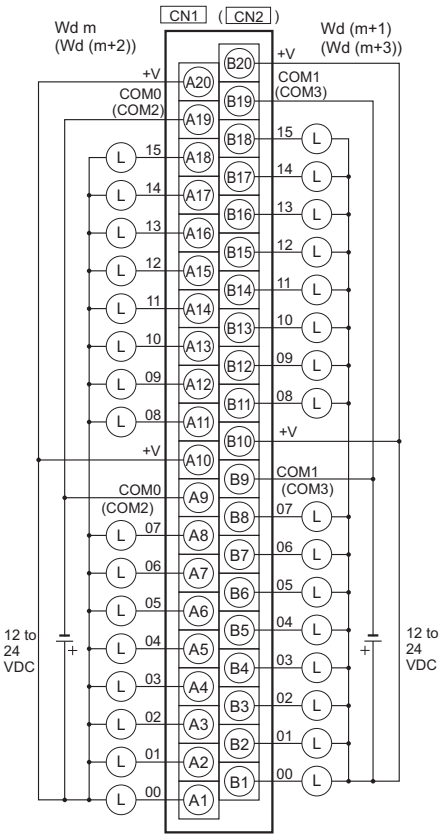

Note The +V terminals and COM terminals are internally connected inside the Controller, but they must all be wired.

Programmable Controller I/O Unit	**CJ1W-OD261**
Connector-Terminal Block Conversion Unit	**XW2C-20G6-IO16 (2 Units)**
Connecting Cables	**XW2Z-□□□L**
Connection diagram	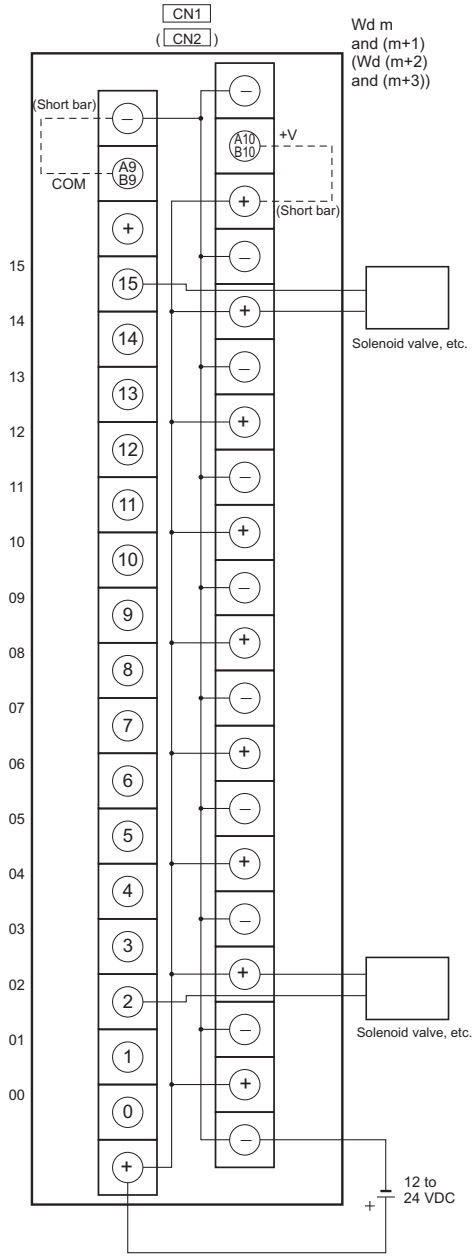

Note 1. Connect the A9/B9 terminal and the ⊖ terminal.
Connect the A10/B10 terminal and the ⊕ terminal.
(Use the enclosed short bar.)

Note 2. The COM terminals are wired inside the Connector-Terminal Block Conversion Unit.

Programmable Controller I/O Unit	**CJ1W-OD262**
Connector-Terminal Block Conversion Unit	**XW2D-40G6**
Connecting Cables	**XW2Z-□□□K**
Connection diagram	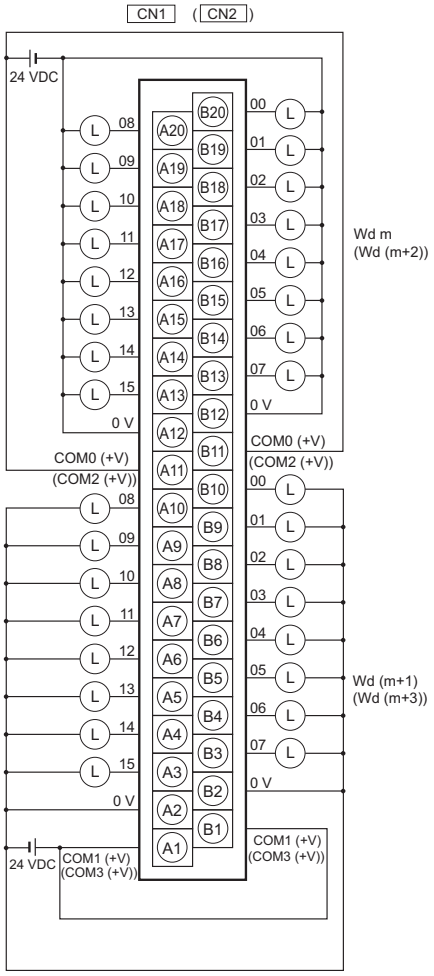

Note The COM (+V) terminals and 0V terminals are internally connected inside the Controller, but they must all be wired.

Programmable Controller I/O Unit	**CJ1W-OD262**
Connector-Terminal Block Conversion Unit	**XW2C-20G6-IO16 (2 Units)**
Connecting Cables	**XW2Z-□□□N**
Connection diagram	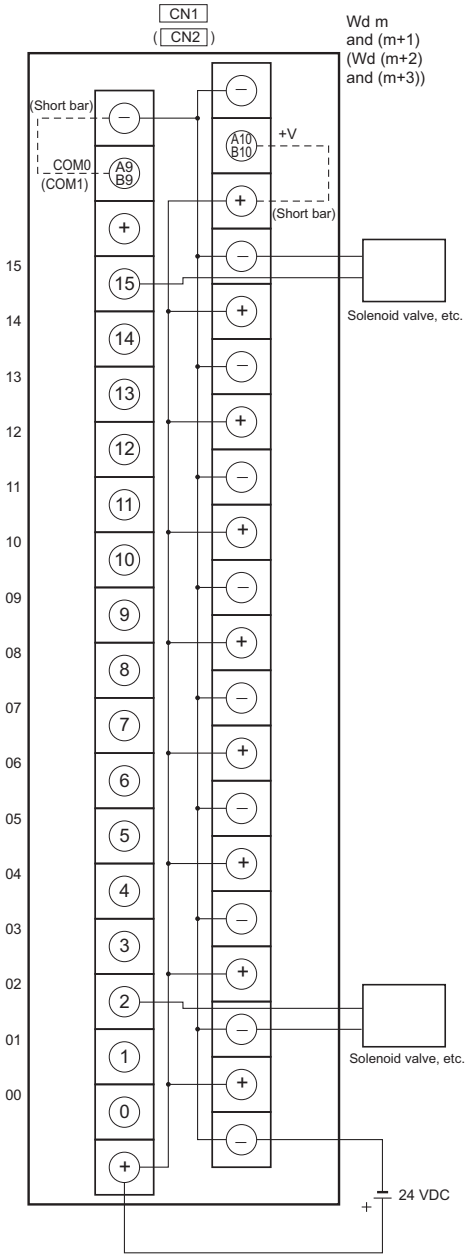

Note 1. Connect the A9/B9 terminal and the ⊖ terminal.
Connect the A10/B10 terminal and the ⊕ terminal.
(Use the enclosed short bar.)

Note 2. The COM terminals are wired inside the Connector-Terminal Block Conversion Unit.

Programmable Controller I/O Unit	**CJ1W-OD263**
Connector-Terminal Block Conversion Unit	**XW2D-40G6**
Connecting Cables	**XW2Z-□□□K**
Connection diagram	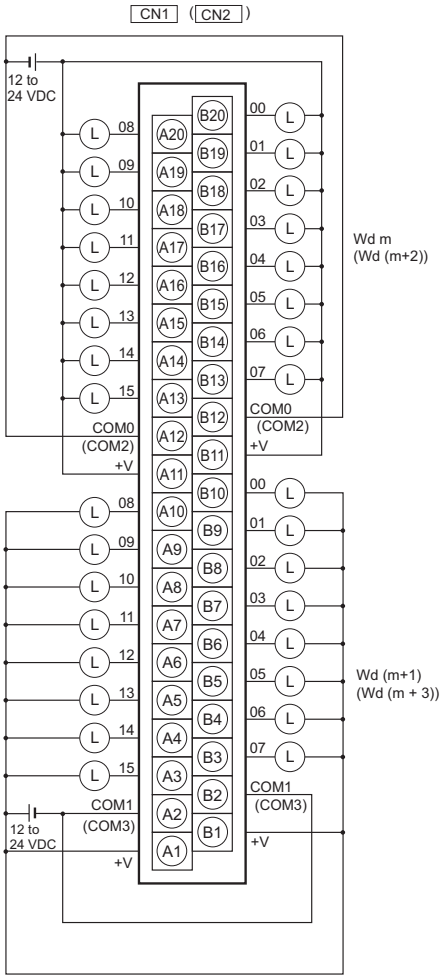

Note The +V terminals and COM terminals are internally connected inside the Controller, but they must all be wired.

Programmable Controller I/O Unit	**CJ1W-OD263**
Connector-Terminal Block Conversion Unit	**XW2C-20G6-IO16 (2 Units)**
Connecting Cables	**XW2Z-□□□N**
Connection diagram	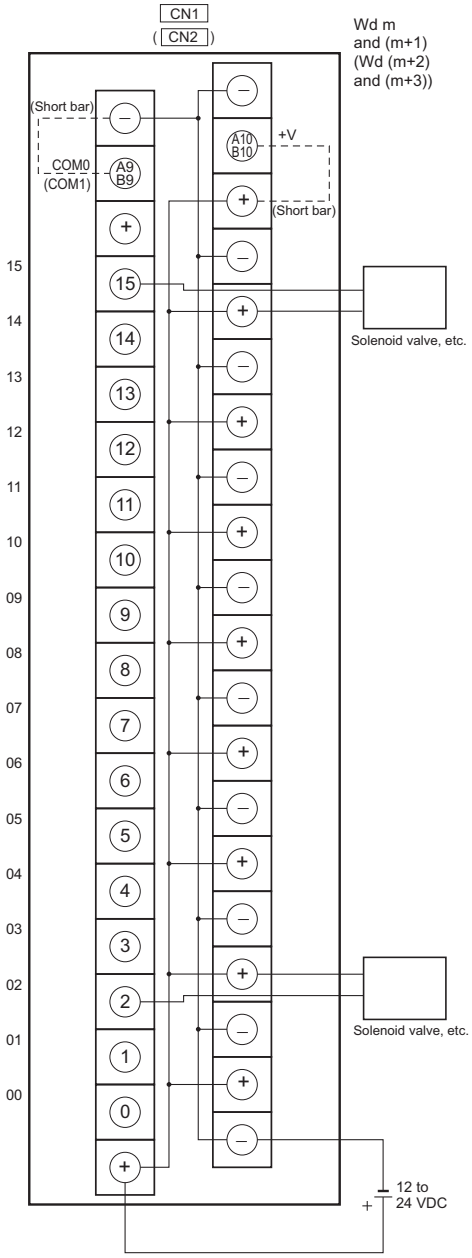

Note 1. Connect the A9/B9 terminal and the ⊖ terminal. Connect the A10/B10 terminal and the ⊕ terminal. (Use the enclosed short bar.)

Note 2. The COM terminals are wired inside the Connector-Terminal Block Conversion Unit.

● Inputs and Outputs

Programmable Controller I/O Unit	**CJ1W-MD231**
Connector-Terminal Block Conversion Unit	**XW2D-20G6**
Connecting Cables	**XW2Z-□□□A**
Connection diagram	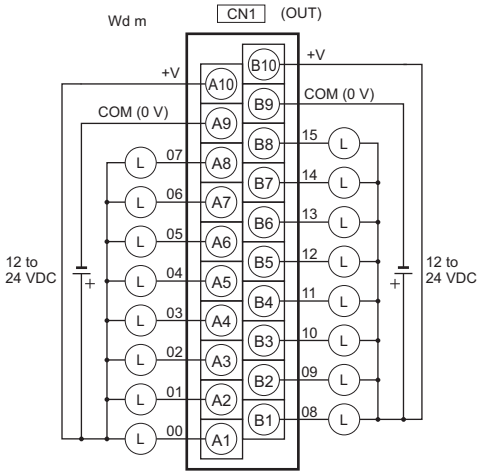 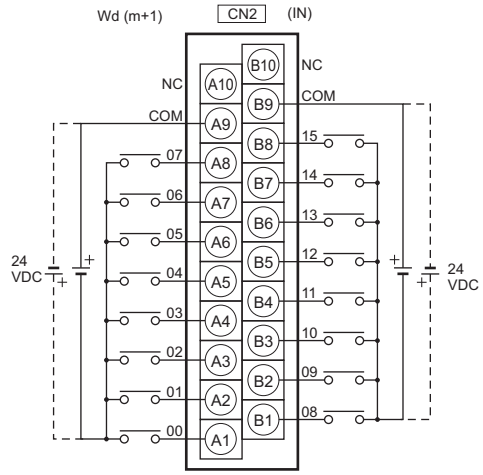

Note 1. The polarity for input power supply connections indicated with dotted lines (- - - - -) can be connected in either direction.

Note 2. The COM terminals are internally connected inside the Controller, but they must all be wired.

Programmable Controller I/O Unit	**CJ1W-MD231**
Connector-Terminal Block Conversion Unit	**XW2C-20G6-IO16**
Connecting Cables	**XW2Z-□□□A**
Connection diagram	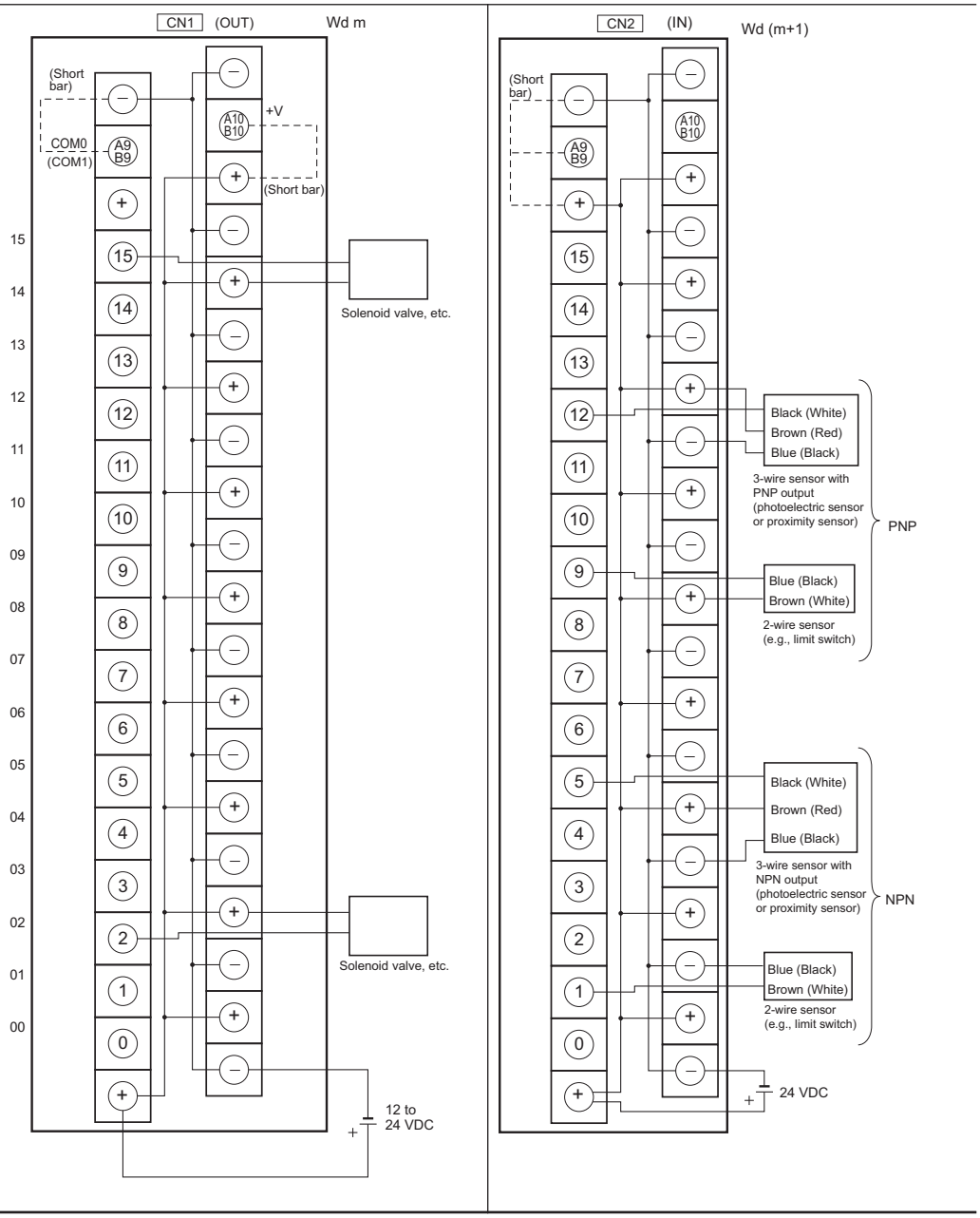

Note 1. Connect the A9/B9 terminal and the ⊖ terminal.

Connect the A10/B10 terminal and the ⊕ terminal.

(Use the enclosed short bar.)

Note 2. The COM terminals are wired inside the Connector-Terminal Block Conversion Unit.

Note 1. Connect the A9/B9 terminal and the ⊕ terminal for NPN.

Connect the A9/B9 terminal and the ⊖ terminal for PNP.

(Use the enclosed short bar.)

Note 2. The COM terminals are wired inside the Connector-Terminal Block Conversion Unit.

Programmable Controller I/O Unit	**CJ1W-MD232**
Connector-Terminal Block Conversion Unit	**XW2D-20G6**
Connecting Cables	**XW2Z-□□□X**
Connection diagram	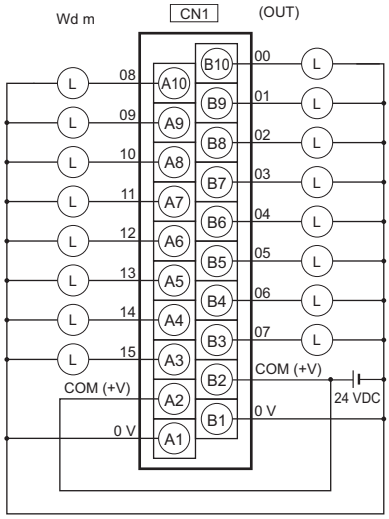 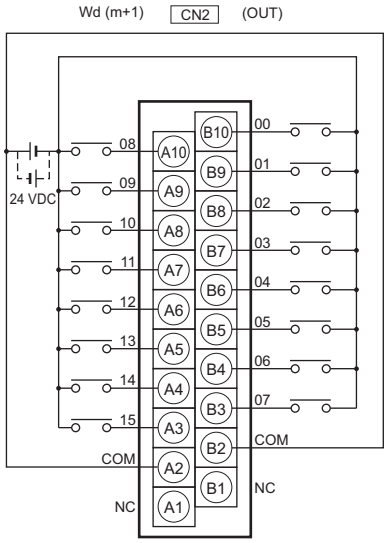

Note 1. The polarity for input power supply connections indicated with dotted lines (- - - - -) can be connected in either direction.

Note 2. The COM terminals and 0V terminals are internally connected inside the Controller, but they must all be wired.

Programmable Controller I/O Unit	**CJ1W-MD233**
Connector-Terminal Block Conversion Unit	**XW2D-20G6**
Connecting Cables	**XW2Z-□□□X**
Connection diagram	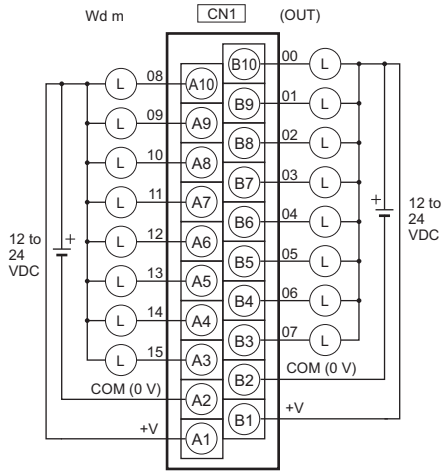 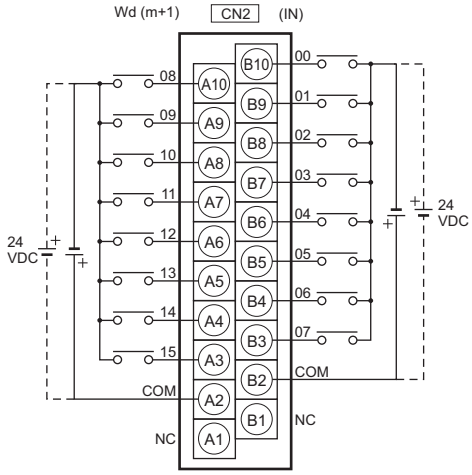

Note 1. The polarity for input power supply connections indicated with dotted lines (- - - - -) can be connected in either direction.

Note 2. The +V terminals and COM terminals are internally connected inside the Controller, but they must all be wired.

Programmable Controller I/O Unit	**CJ1W-MD261**
Connector-Terminal Block Conversion Unit	**XW2D-40G6** **XW2D-40G6RF**
Connecting Cables	**XW2Z-□□□B**
Connection diagram	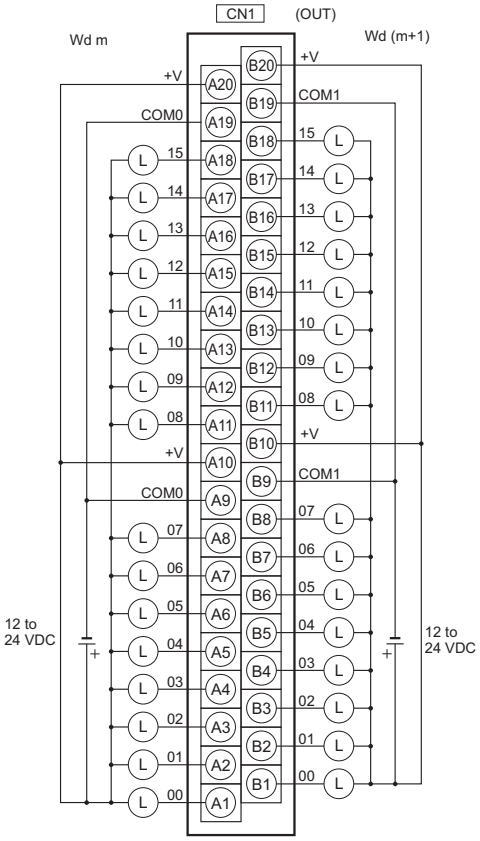 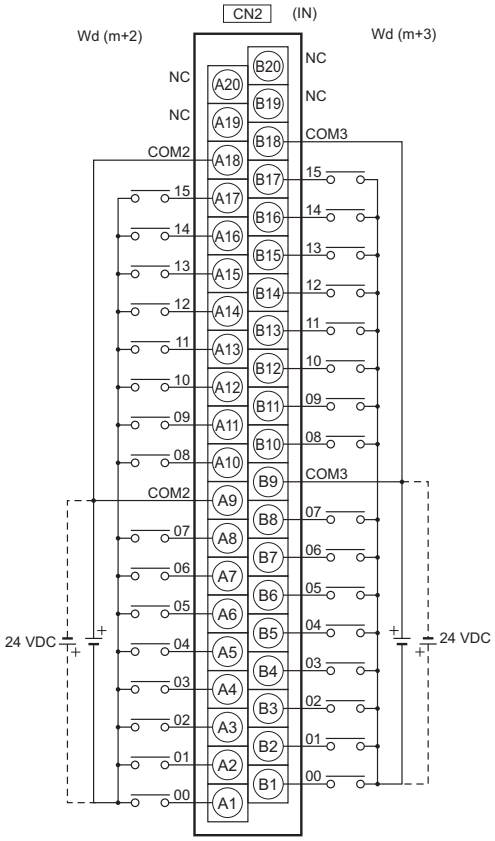

Note The +V terminals and COM terminals are internally connected inside the Controller, but they must all be wired.

Note 1. The polarity for input power supply connections indicated with dotted lines (- - - - -) can be connected in either direction provided that the same polarity is used for the commons for rows A and B.

Note 2. Both COM2 and COM3 have two pins each. They are internally connected inside the Controller, but they must all be wired.

Programmable Controller I/O Unit	**CJ1W-MD261**	
Connector-Terminal Block Conversion Unit	**XW2C-20G6-IO16 (2 Units)**	**XW2C-20G6-IO16 (2 Units)**
Connecting Cables	**XW2Z-□□□L**	**XW2Z-□□□D**
Connection diagram	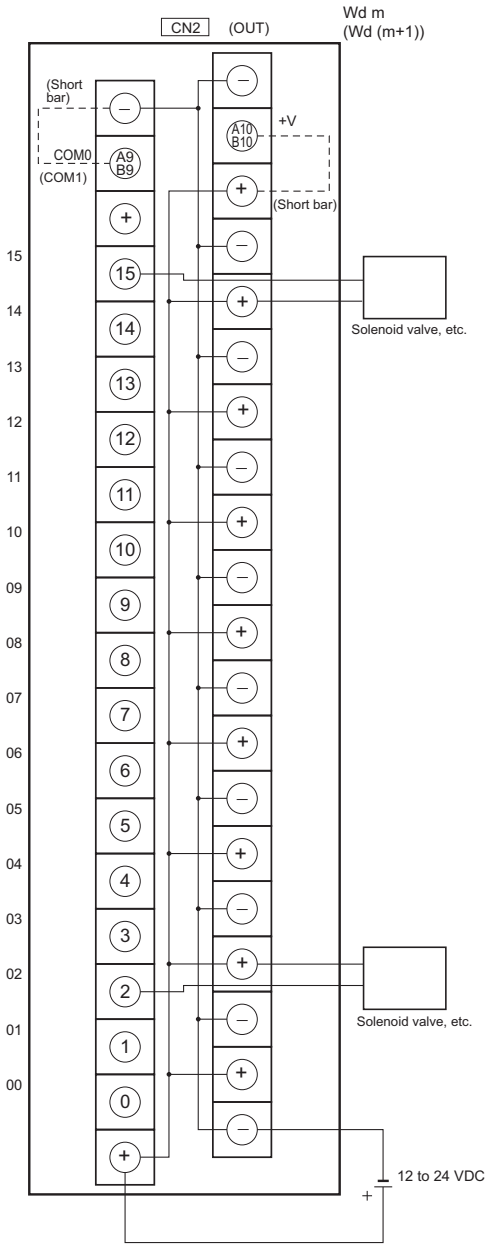	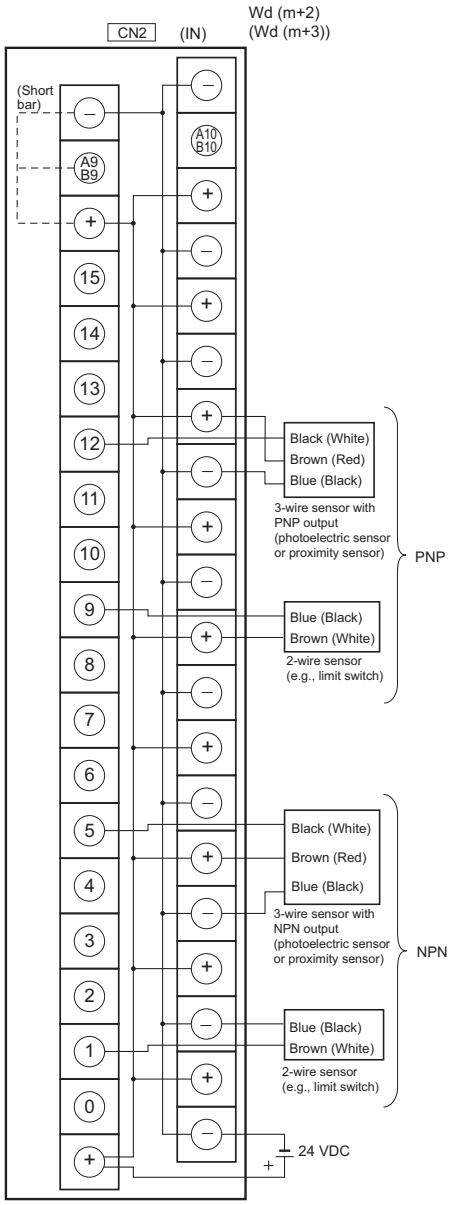

Note 1. Connect the A9/B9 terminal and the ⊖ terminal.

Connect the A10/B10 terminal and the ⊕ terminal.

(Use the enclosed short bar.)

Note 2. The COM terminals are wired inside the Connector-Terminal Block Conversion Unit.

Note 1. Connect the A9/B9 terminal and the ⊕ terminal for NPN.

Connect the A9/B9 terminal and the ⊖ terminal for PNP.

(Use the enclosed short bar.)

Note 2. The COM terminals are wired inside the Connector-Terminal Block Conversion Unit.

Programmable Controller I/O Unit	**CJ1W-MD263**
Connector-Terminal Block Conversion Unit	**XW2D-40G6** **XW2D-40G6-RM**
Connecting Cables	**XW2Z-□□□K**
Connection diagram	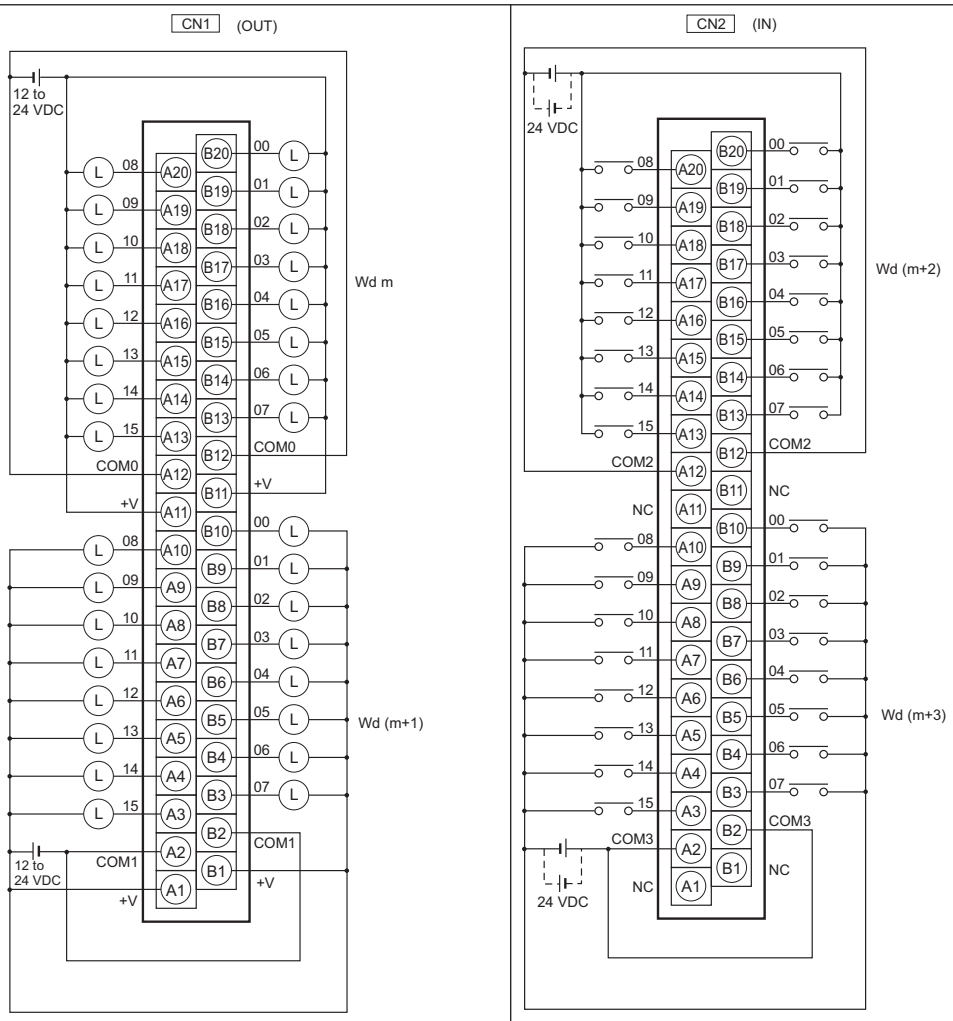

Note The +V terminals and COM terminals are internally connected inside the Controller, but they must all be wired.

Note The polarity for input power supply connections indicated with dotted lines (- - - - -) can be connected in either direction.
Both COM2 and COM3 have two pins each. They are internally connected inside the Controller, but they must all be wired.

Programmable Controller I/O Unit	**CJ1W-MD263**
Connector-Terminal Block Conversion Unit	**XW2C-20G6-IO16 (2 Units)**
Connecting Cables	**XW2Z-□□□N**
Connection diagram	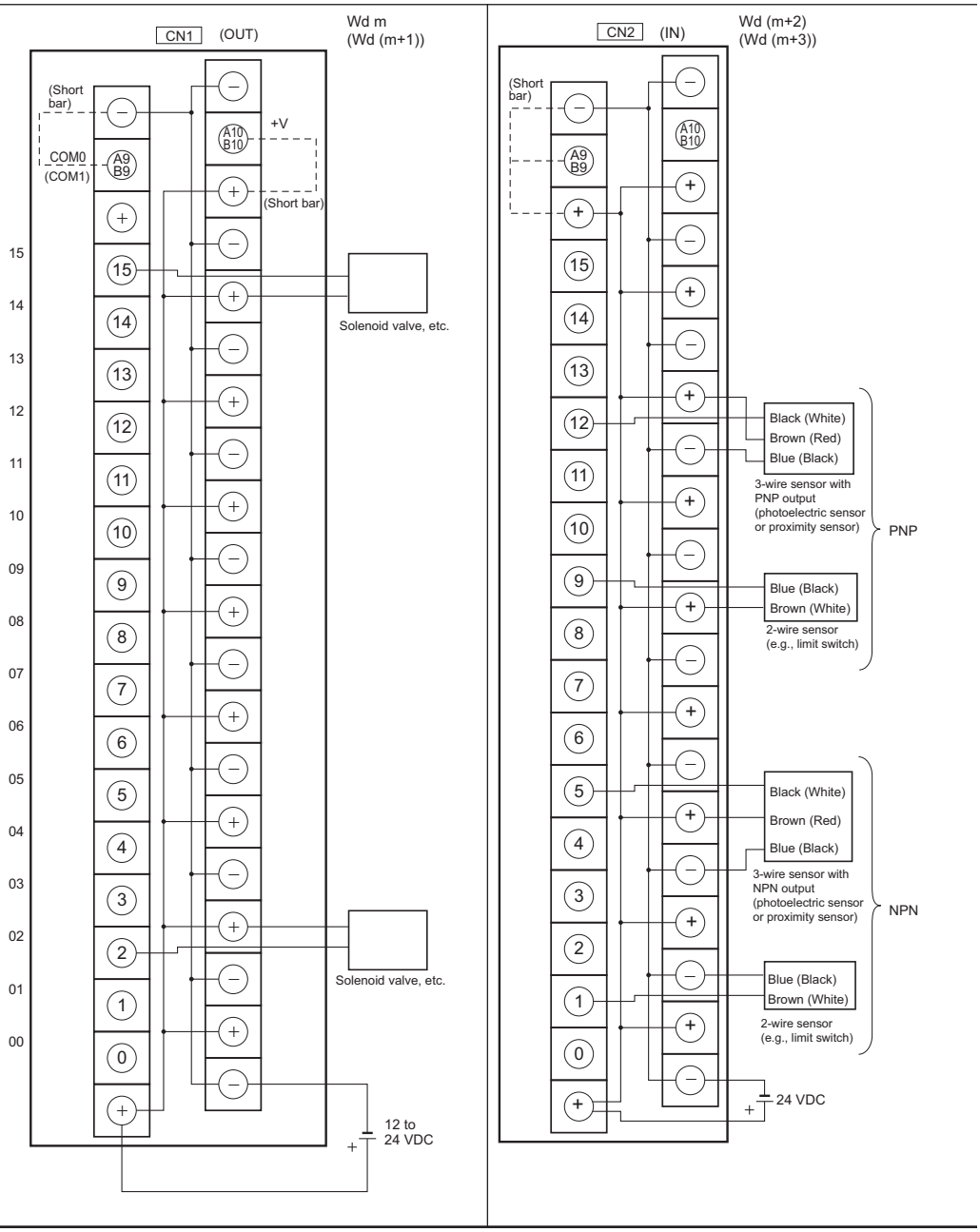

Note 1. Connect the A9/B9 terminal and the ⊖ terminal.

Connect the A10/B10 terminal and the ⊕ terminal.

(Use the enclosed short bar.)

Note 2. The COM terminals are wired inside the Connector-Terminal Block Conversion Unit.

Note 1. Connect the A9/B9 terminal and the ⊕ terminal for NPN.

Connect the A9/B9 terminal and the ⊖ terminal for PNP.

(Use the enclosed short bar.)

Note 2. The COM terminals are wired inside the Connector-Terminal Block Conversion Unit.

Programmable Controller I/O Unit	**CJ1W-MD563**
Connector-Terminal Block Conversion Unit	**XW2D-40G6** **XW2D-40G6-RM**
Connecting Cables	**XW2Z-□□□K**
Connection diagram	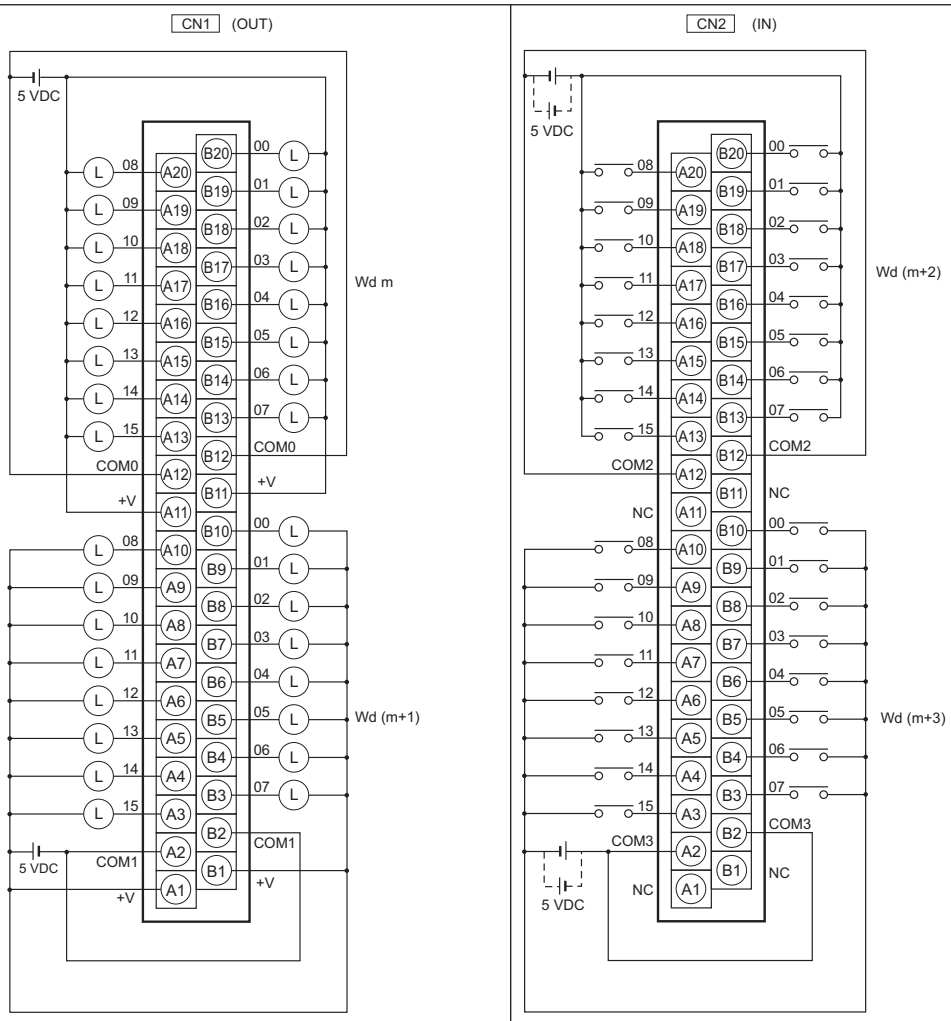

Note 1. The +V terminals and COM terminals are internally connected inside the Controller, but they must all be wired.

Note 2. The power supply voltage for the CJ1W-MD563 is 5 V.

Note 1. The COM terminals are internally connected inside the Controller, but they must all be wired.

Note 2. The power supply voltage for the CJ1W-MD563 is 5 V.

Connection Diagrams for I/O Relay Terminals

Connection examples and internal connection diagrams for I/O Relay Terminals connected to Basic I/O Units are shown below.

● Inputs

G7TC I/O Relay Terminals

G7TC-ID16

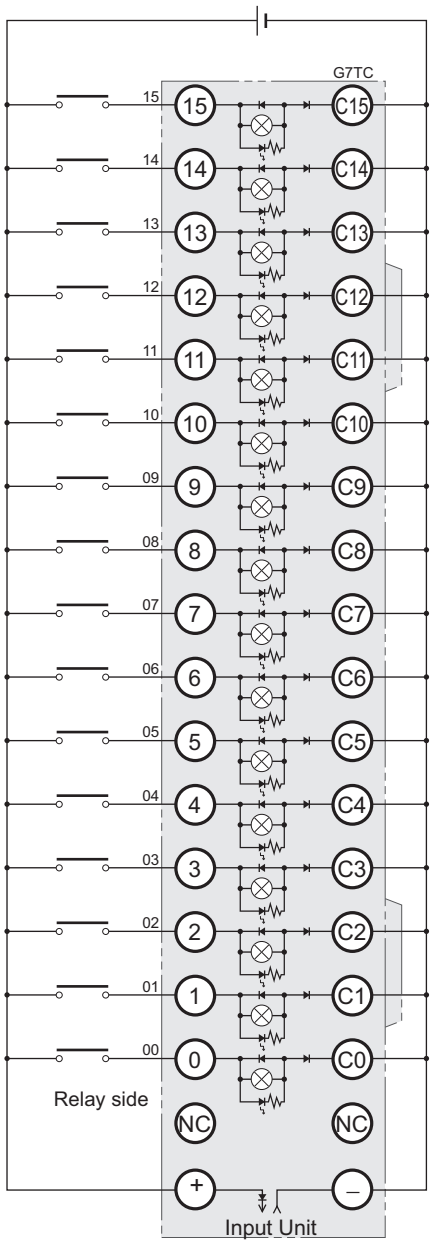

TOP VIEW

Note 1. Inputs to the Input Units and I/O Relay Terminals use isolated contacts. “00” to “15” are the input bit numbers for the Input Unit and the I/O Relay Terminal.

Note 2. Use the G78-04 short bar to short to the common terminal.

G7TC-IA16

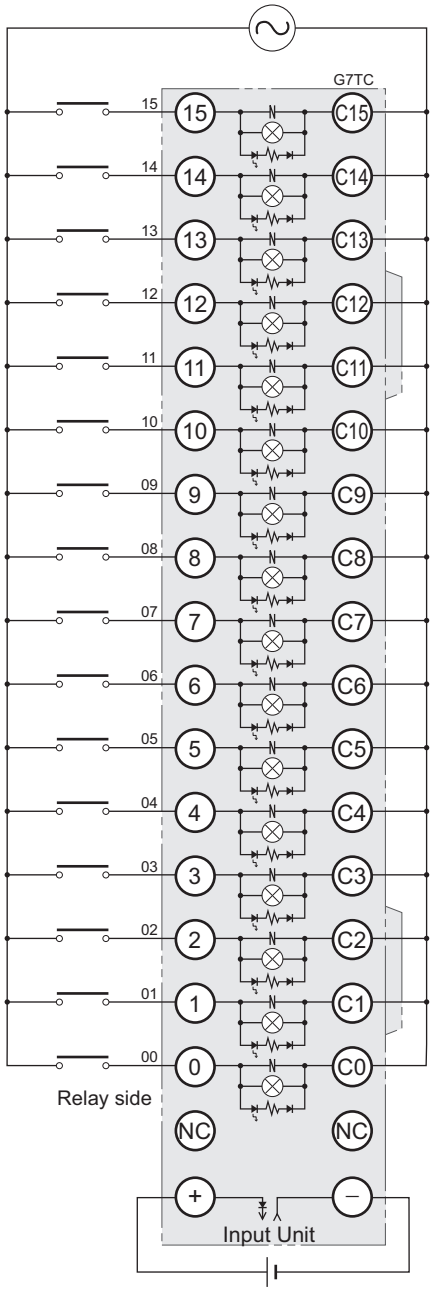

TOP VIEW

Note 1. Inputs to the Input Units and I/O Relay Terminals use isolated contacts. “00” to “15” are the input bit numbers for the Input Unit and the I/O Relay Terminal.

Note 2. Use the G78-04 short bar to short to the common terminal.

● Outputs

G70D-V Relay Terminals

G70D-VSOC16

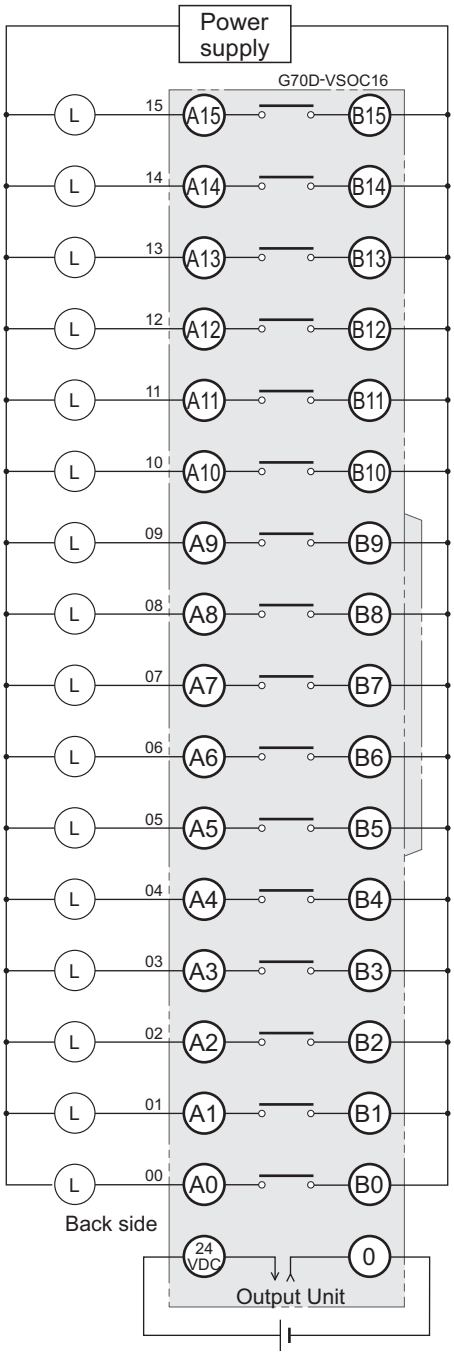

TOP VIEW

Note 1. They are also isolated from the Output Unit and I/O Relay Terminal.
"00" to "15" are the output numbers for the Output Unit and the I/O Relay Terminal.

Note 2. Use the G6D-4-SB short bar to short to the common terminal.

G70D-VSOC16+G70D-ET

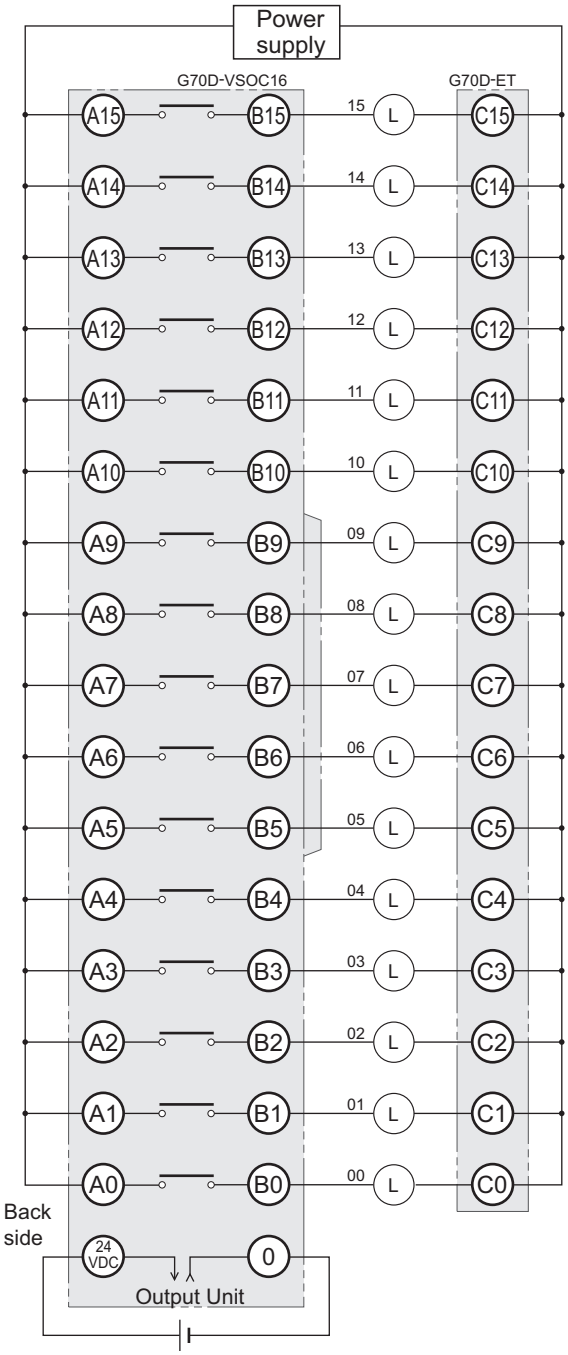

TOP VIEW

Note 1. They are also isolated from the Output Unit and I/O Relay Terminal.
"00" to "15" are the output numbers for the Output Unit and the I/O Relay Terminal.

Note 2. Use the G6D-4-SB short bar to short to the common terminal.

G70D Relay Terminals

G70D-SOC16

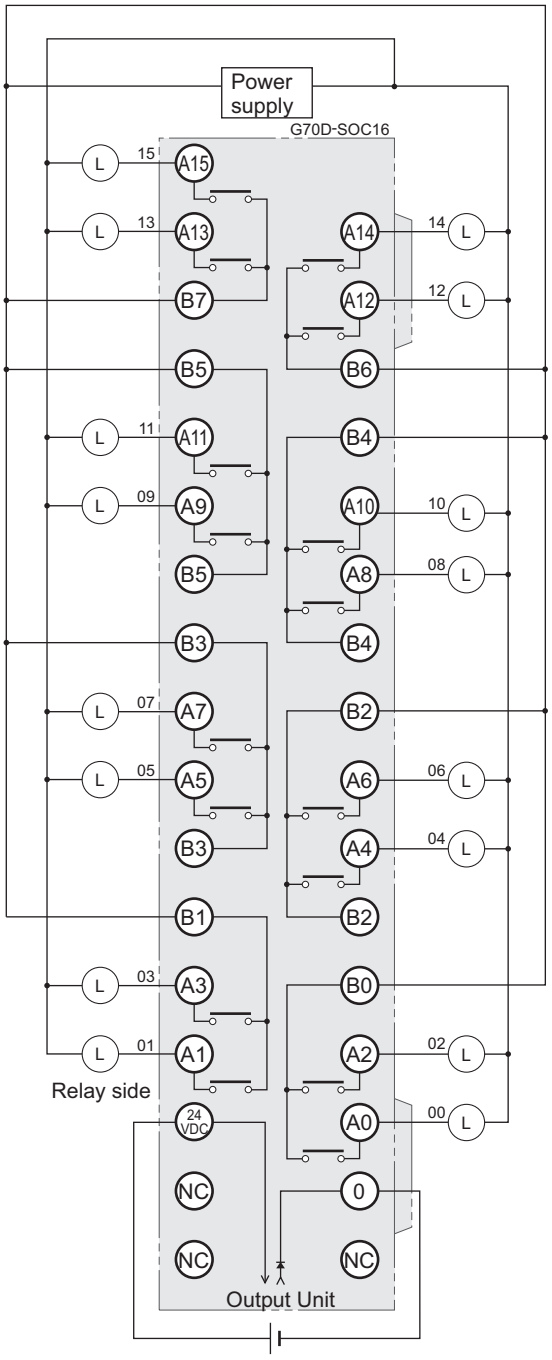

TOP VIEW

Note Every two outputs share a common. The current supplied is 3 A per common.
They are also isolated from the Output Unit and I/O Relay Terminal.
“00” to “15” are the output numbers for the Output Unit and the I/O Relay Terminal.

G70D-SOC08

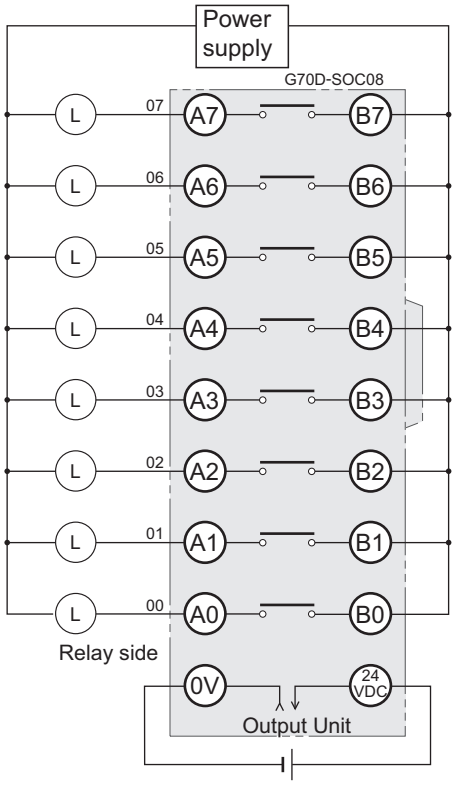

TOP VIEW

Note 1. All outputs are independent.
They are also isolated from the Output Unit and I/O Relay Terminal.
“00” to “07” are the output numbers for the Output Unit and the I/O Relay Terminal.

Note 2. Use the G6D-4-SB short bar to short to the common terminal.

G70R Relay Terminals

G70R-SOC08

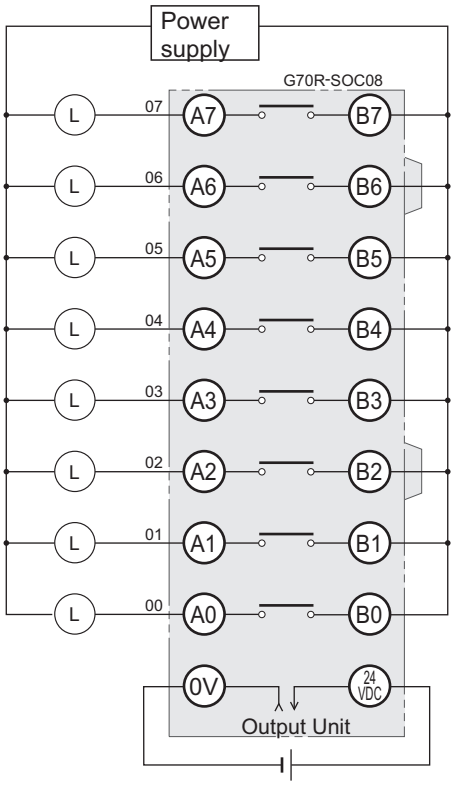

TOP VIEW

Note 1. All outputs are independent.
They are also isolated from the Output Unit and I/O Relay Terminal.
“00” and “07” are the output numbers for the Output Unit and the I/O Relay Terminal.

Note 2. Use the G6D-4-SB short bar to short to the common terminal.

G7TC I/O Relay Terminals

G7TC-OC16/OC08

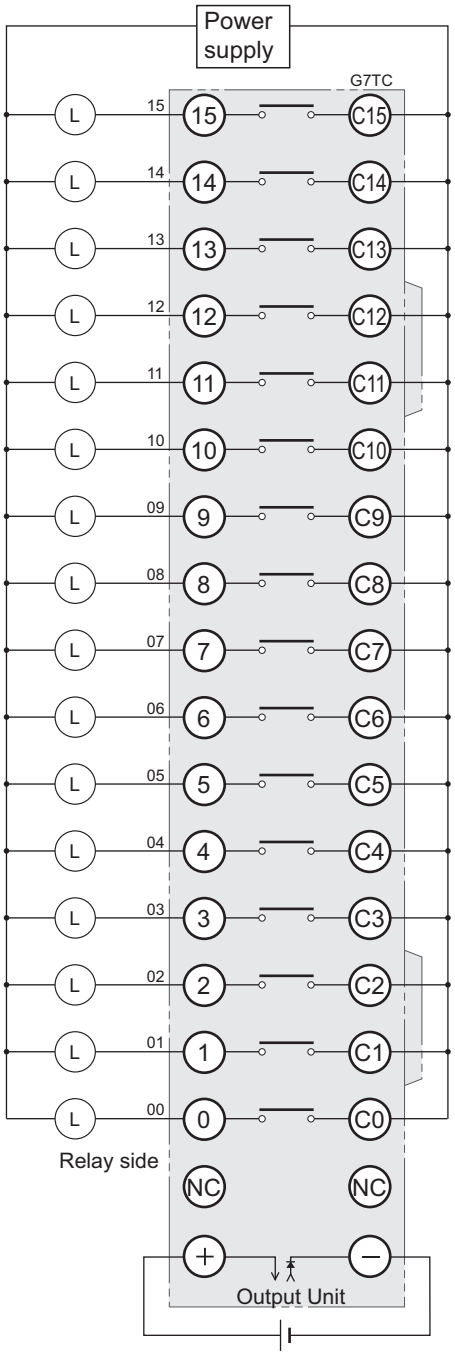

TOP VIEW

Note 1. All outputs are independent.
They are also isolated from the Output Unit and I/O Relay Terminal.
“00” to “15” are the output numbers for the Output Unit and the I/O Relay Terminal.

Note 2. The G7TC-OC08 has only 8 outputs and therefore does not have 8 to 15 and C8 to C15.

Note 3. Use the G78-04 short bar to short to the common terminal.

G7TC I/O Relay Terminals

G7TC-OC16-1

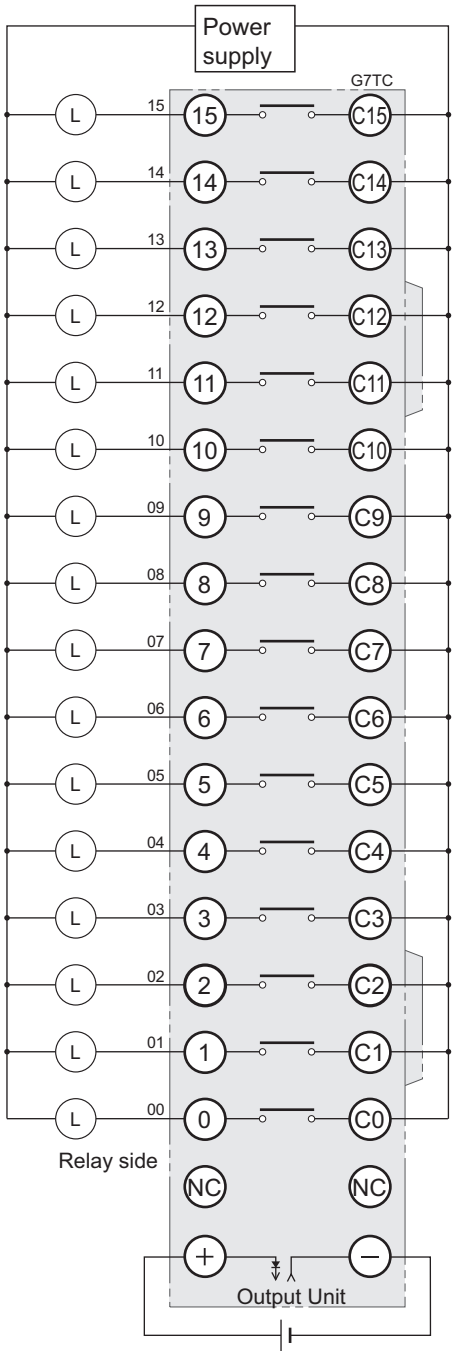

TOP VIEW

Note 1. All outputs are independent.
They are also isolated from the Output Unit and I/O Relay Terminal.
“00” to “15” are the output numbers for the Output Unit and the I/O Relay Terminal.

Note 2. Use the G78-04 short bar to short to the common terminal.

G70A-ZOC16 Relay Terminal Socket

G70A-ZOC16-3+G2R-1-S (16 Units)

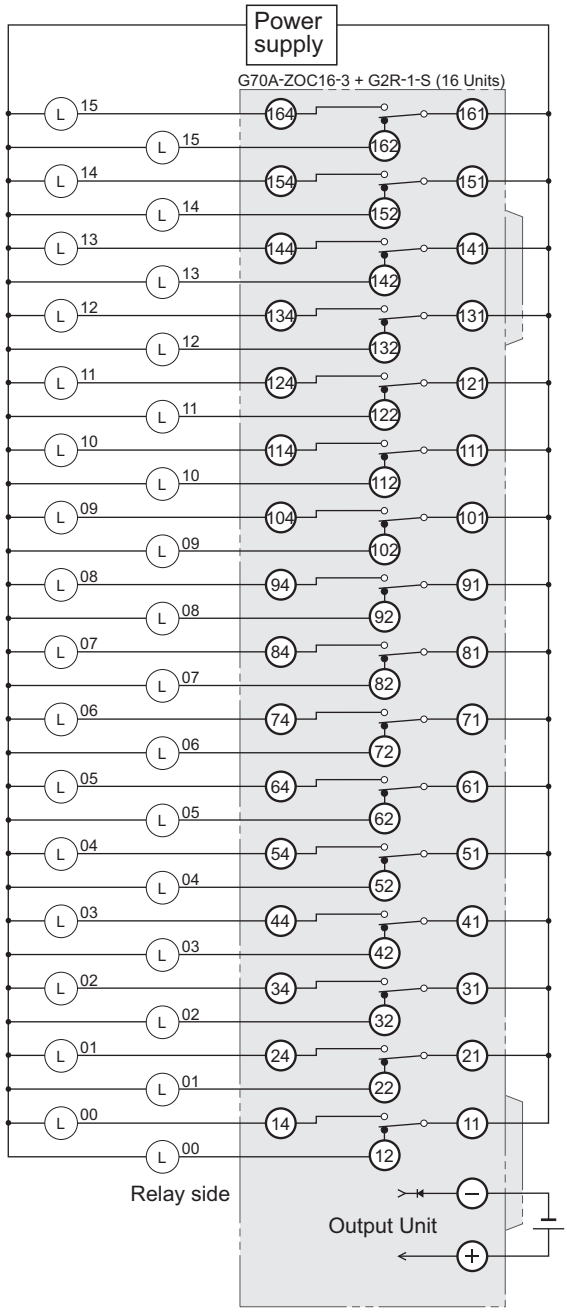

TOP VIEW

Note 1. The above diagram is an example with the G2R-1-S(N) mounted to the G70A-ZOC16-3.

Note 2. All outputs are independent.
They are also isolated from the Output Unit and I/O Relay Terminal.
“00” to “15” are the output numbers for the Output Unit and the I/O Relay Terminal.

A-3 Dimensions

A-3-1 NJ-series CPU Units

NJ501-□□□□, NJ301-□□□□ and NJ101-□□□□

Unit: mm

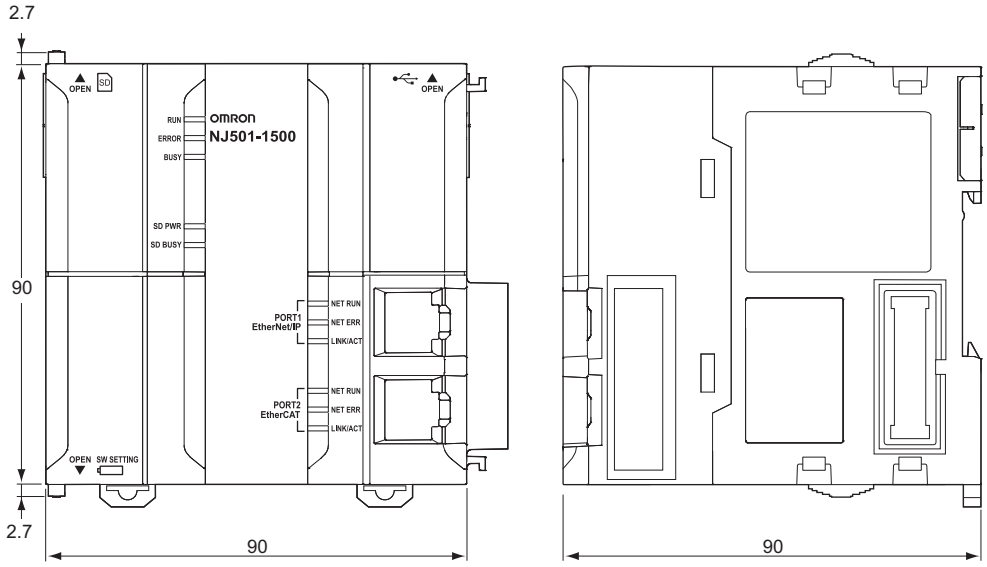

A-3-2 NJ-series Power Supply Units

NJ-PA3001

Unit: mm

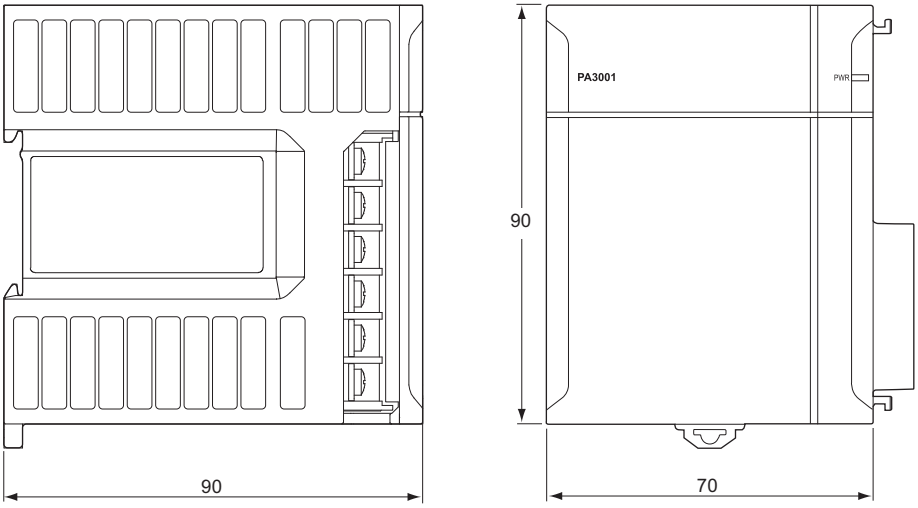

NJ-PD3001

Unit: mm

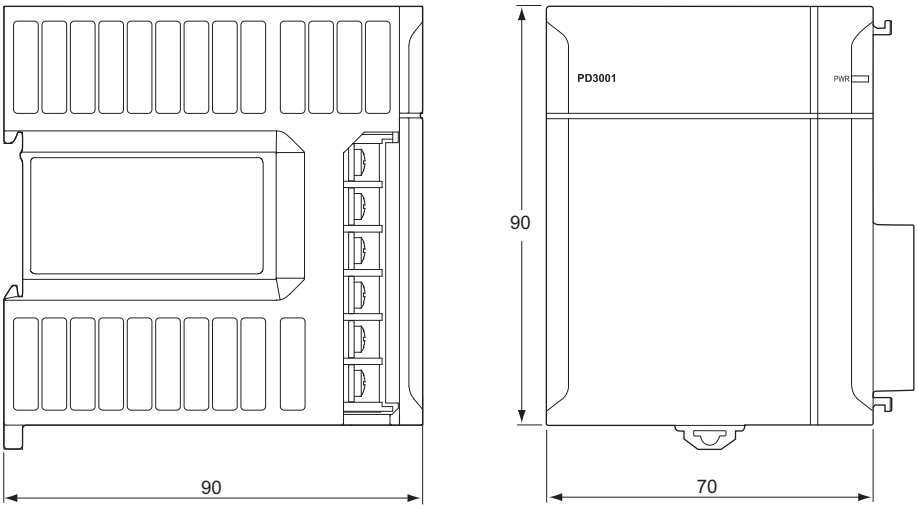

A-3-3 CJ-series Basic I/O Units

8/16-point Units with 18-terminal Terminal Blocks

Unit: mm

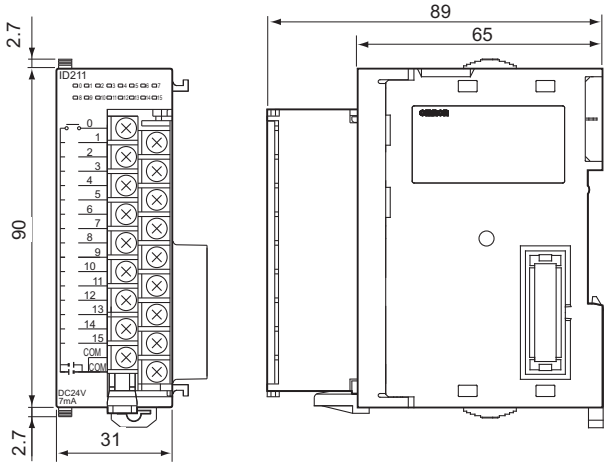

32-point Units (Input Units and Output Units)

Unit: mm

Units with Fujitsu / OTAX-compatible Connector (40-pin × 1)

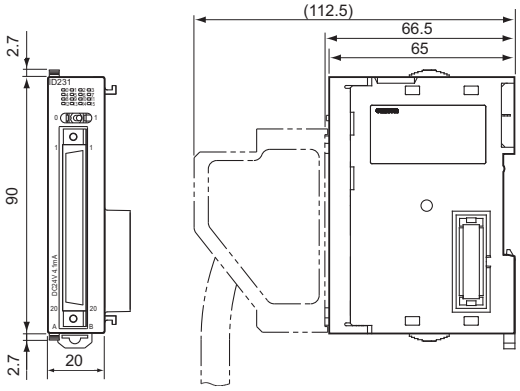

Units with MIL Connector (40-pin × 1)

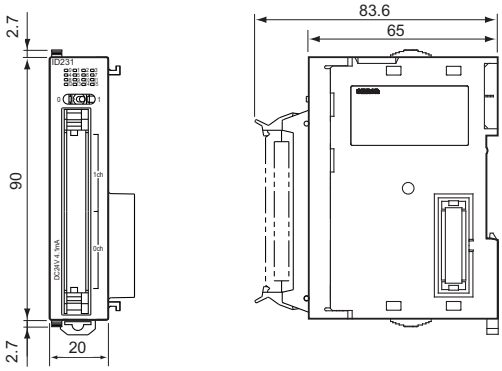

32-point Units (24-VDC Input/Transistor Output Units)

Unit: mm

Units with Fujitsu / OTAX-compatible Connector (24-pin × 2)

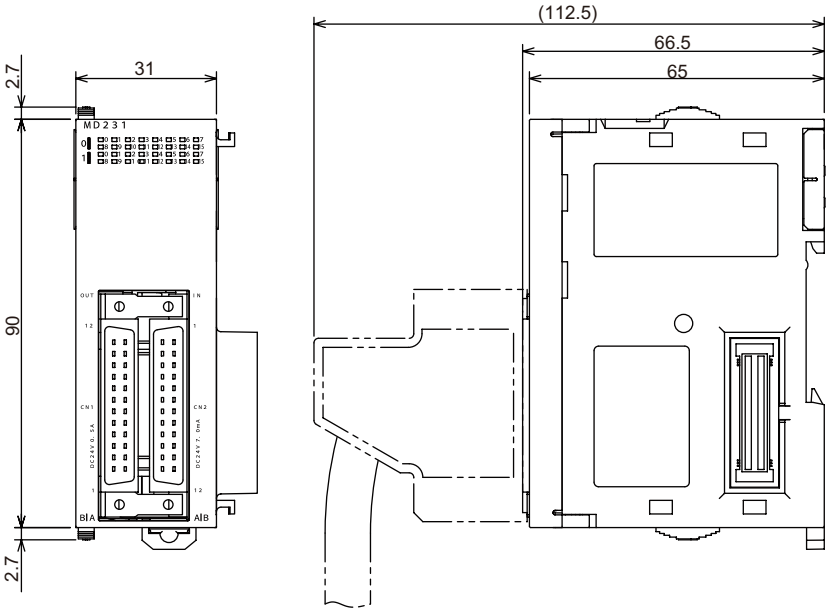

Units with MIL Connector (20-pin × 2)

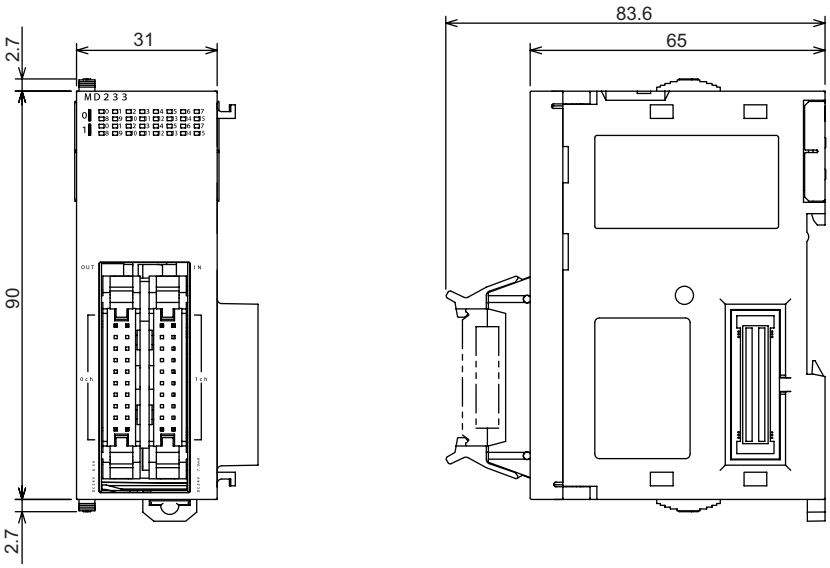

64-point Units (Input Units, Output Units, 24-VDC Input/Transistor Output Units, TTL I/O Units)

Unit: mm

Units with Fujitsu / OTAX-compatible Connector (40-pin × 2)

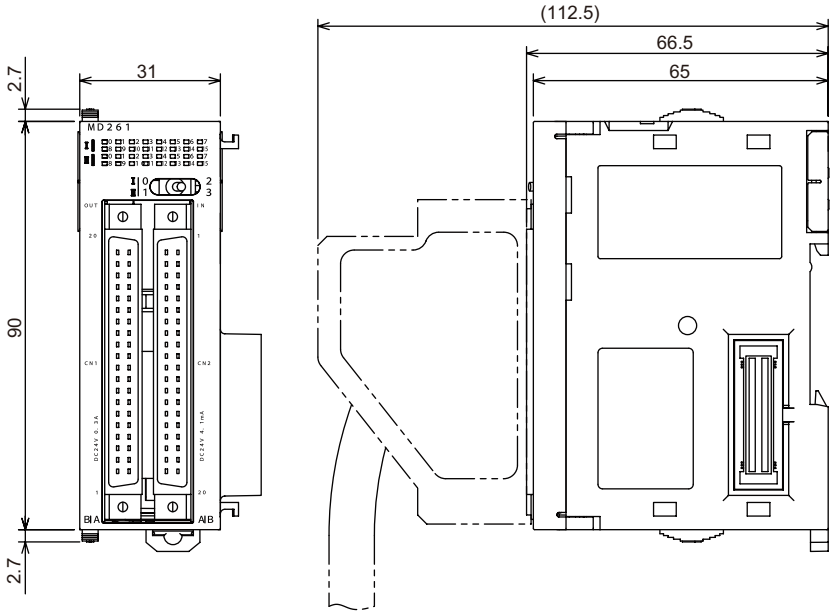

Units with MIL Connector (40-pin × 2)

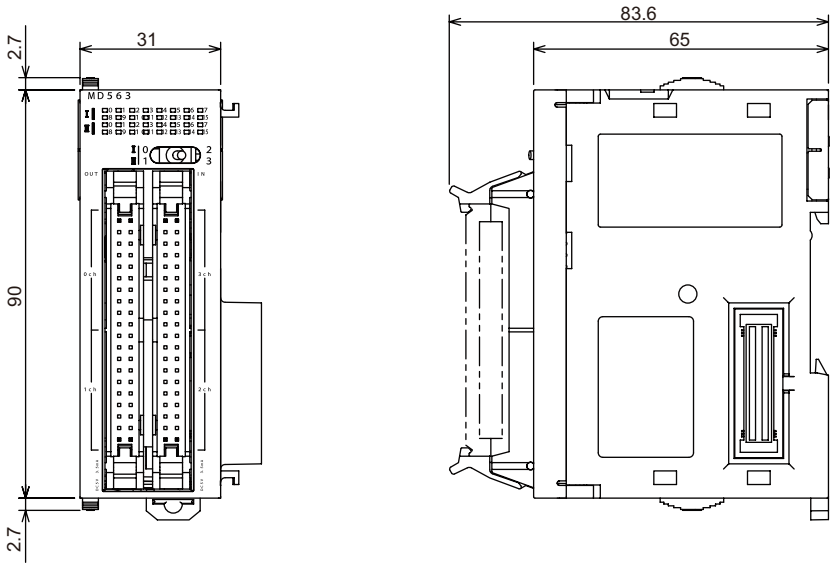

A-3-4 B7A Interface Unit

Unit: mm

CJ1W-B7A□□

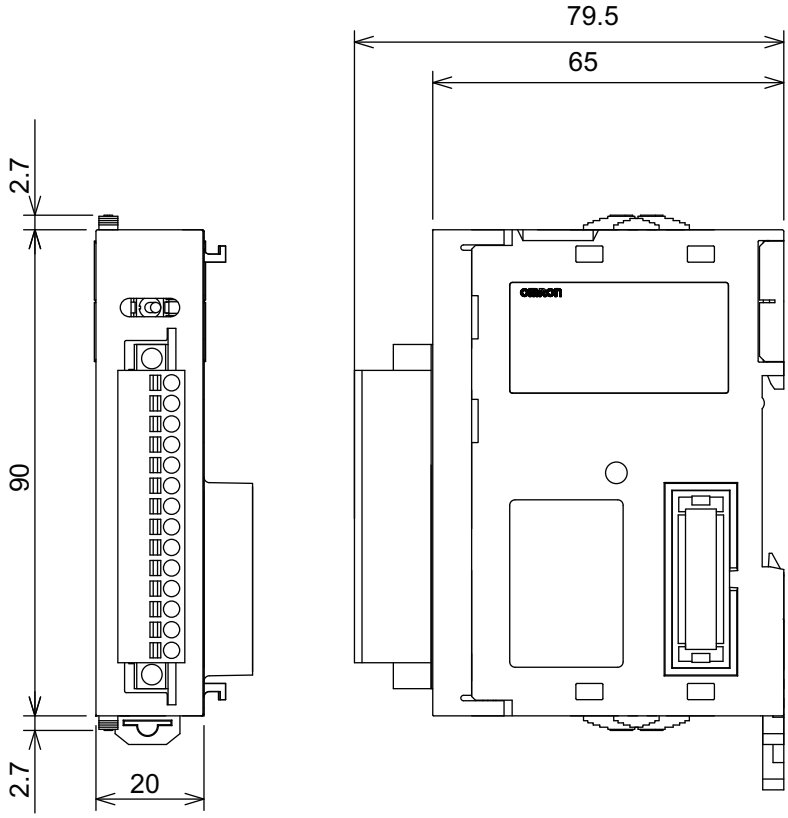

A-3-5 CJ-series I/O Control Unit and I/O Interface Unit

Unit: mm

CJ1W-IC101
I/O Control Unit

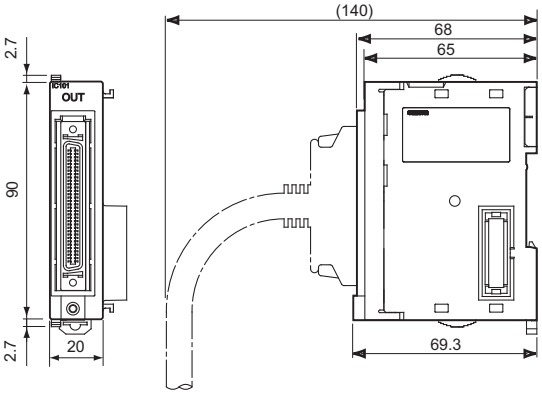

CJ1W-II101
I/O Interface Unit

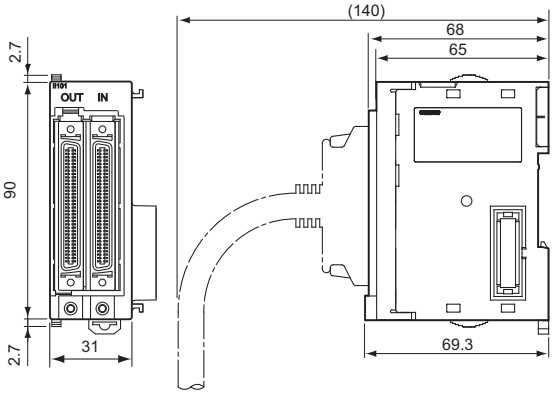

A-3-6 SD Memory Card

Unit: mm

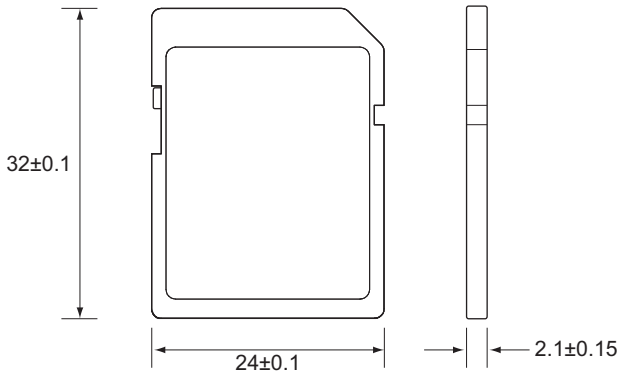

A-4 Load Short-circuit Protection and Line Disconnection Detection for CJ-series Basic I/O Units

A-4-1 Load Short-circuit Protection and Line Disconnection Detection for CJ1W-OD202

This section describes the load short-circuit protection and line disconnection detection of the CJ1W-OD202 Output Units.
As shown below, normally when the output bit (OUT) turns ON, the transistor will turn ON and then output current (Iout) will flow.

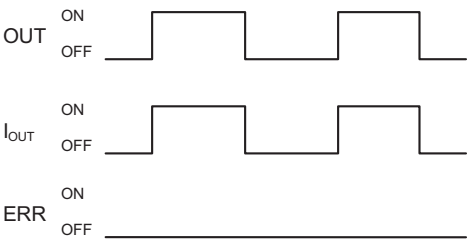

OUT:	Output bit
I_{OUT}:	Output current
ERR:	Alarm output, ERR indicator
I_{lim}:	Short-circuit detection current
I_{OL}:	Disconnection detection current
T_j:	Junction temperature of transistor
T_{std}:	Thermal shutdown temperature
T_r:	Reset temperature

Figure 1 Normal Operation

If the output current (Iout) exceeds the detection current (Ilim) when an overload or short-circuit occurs, the output current (Iout) will be limited as shown in figure below. When the junction temperature (Tj) of the output transistor reaches the thermal shutdown temperature (Tstd), the output will turn OFF to protect the transistor from being damaged, and the alarm output bit will turn ON to light the *ERR* indicator.
When the junction temperature (Tj) of the transistor drops down to the reset temperature (Tr), the ERR indicator will be automatically reset and the output current will start flowing.

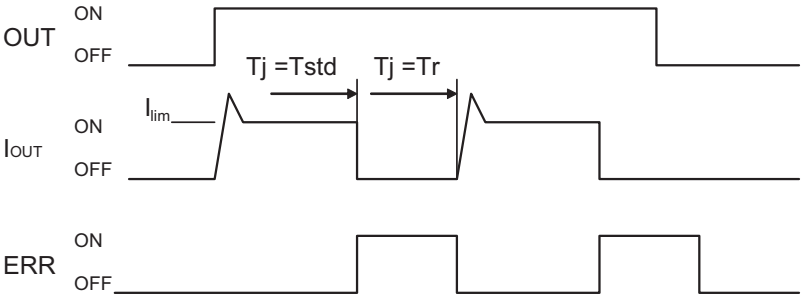

Figure 2 Operation for Overload or Short Circuit

If the line is disconnected and the output current (Iout) drops below the line disconnection detection current (IOL), the *ERR* indicator will light as shown in the following figure.

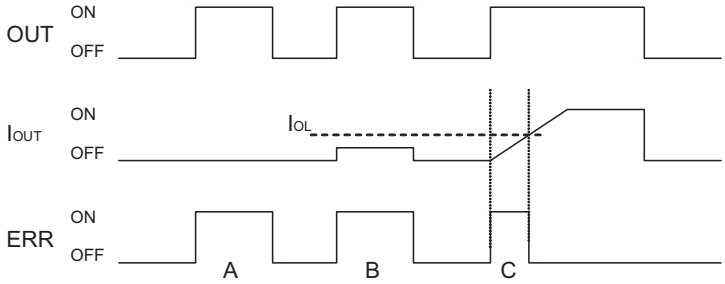

Figure 3 Operation for Disconnected Line with Output Current below the Line Disconnection Detection Current

A: Load not connected or load line broken.

B: Current to load at or below line disconnection detection current.

C: Rise of current to load too slow and error detected before the disconnection detection current was reached.

When load L is connected, the *ERR* indicator may light and the Alarm Output Bit may turn ON for approximately 100 ms. The programming example given in the next section can be used so that an error is not detected in this case.

● Operating Restrictions of CJ1W-OD202

Although the CJ1W-OD202 is provided with load short-circuit protection, these are for protecting internal circuits against momentary short-circuiting in the load.

As shown in Figure 2, the load short-circuit protection is automatically released when the Tj equals to Tr. Therefore, unless the cause of short-circuit is removed, ON/OFF operations will be repeated in the output.

Leaving short-circuits for any length of time will cause internal temperature rise, deterioration of elements, discoloration of the case or PCBs, etc.

Therefore, observe the following restrictions.

● Restrictions

If a short-circuit occurs in an external load, immediately turn OFF the corresponding output and remove the cause.

The CJ1W-OD202 turns ON an alarm output bit that corresponds to the external load output number. There is an alarm output bit for every two outputs.

When an alarm output bit turns ON, use a self-holding bit for the alarm in the user program and turn OFF the corresponding output.

The Alarm Output Bits are allocated in the *Basic I/O Unit Information Area* system-defined variable.

Two output bits are assigned for each slot and rack in which a Unit is mounted.

_CJB_IOUnitInfo[rack_number,slot_number,serial_number_in_Unit]

For example,

when the CJ1W-OD202 is mounted in slot 0 of rack 0, *_CJB_IOUnitInfo[0,0,0]* changes to TRUE if output *Ch1Out0* changes to TRUE.

When the CJ1W-OD202 is mounted in slot 1 of rack 0, *_CJB_IOUnitInfo[0,1,3]* changes to TRUE if output *Ch1Out7* changed to TRUE.

● Programming Example

In this example, CJ1W-OD202 is mounted in slot 0 of rack 0.

This example shows how to change output *Jxx_Ch1_Out00* to FALSE immediately if the Alarm Output Bit *_CJB_IOUnitInfo[0,0,0]* changes to TRUE and how to keep the output FALSE until the cause is removed and the bit is reset with *ResetOD202*.

To prevent the Alarm Output Bit from changing to TRUE momentarily when the inductive load turns ON, the alarm output is not changed to TRUE for 200 ms after input En_OD202 changes to TRUE.

Variable	Data type	Initial value	Address	Comment
OutData	BOOL	FALSE		Output data
NG	BOOL	FALSE		TON_OC202 timer output
ResetOD202	BOOL	FALSE		Reset switch
AlarmOut	BOOL	FALSE		Error flag
J01_Ch1_Out00	BOOL		IOBus://rack#0/slot#0/Ch1_Out/Ch1_Out00	OC202 output
_CJB_IOUnitInfo	ARRAY[0..3,0..9,0..7] OF BOOL			Basic I/O Unit information array

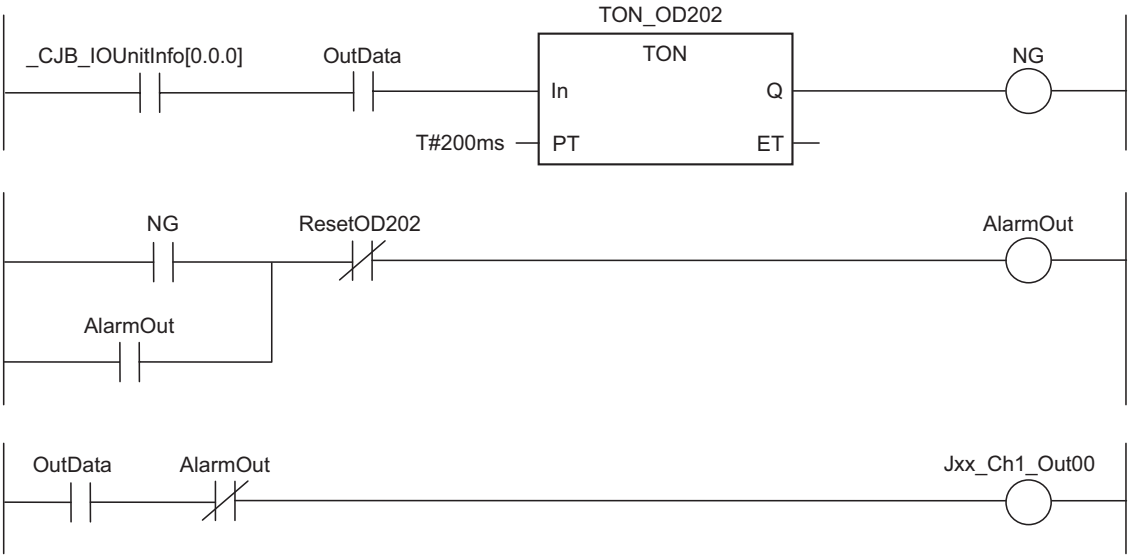

A-4-2 Load Short-circuit Protection for CJ1W-OD204/OD212/OD232/MD232

As shown below, normally when the output bit turns ON (OUT), the transistor will turn ON and then output current (Iout) will flow.
If the output current (Iout) exceeds the detection current (Ilim) when an overload or short-circuit occurs, the output current (Iout) will be limited as shown in Figure 2. When the junction temperature (Tj) of the output transistor reaches the thermal shutdown temperature (Tstd), the output will turn OFF to protect the transistor from being damaged, and the alarm output bit will turn ON to light the *ERR* indicator.
When the junction temperature (Tj) of the transistor drops down to the reset temperature (Tr), the ERR indicator will be automatically reset and the output current will start flowing.

Figure 1 Normal Operation

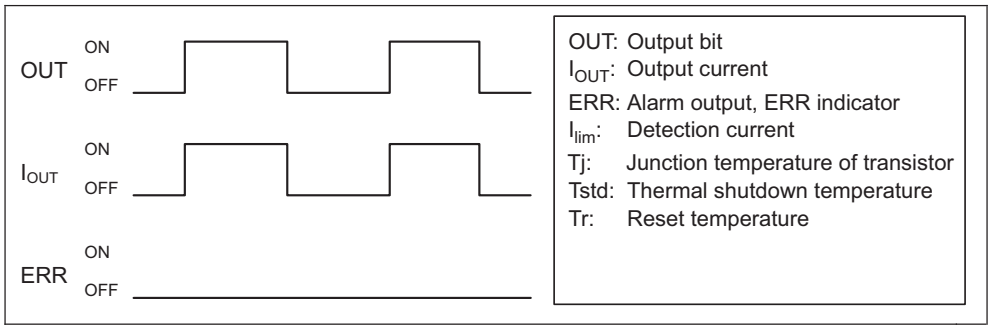

Figure 2 Operation for Overload or Short Circuit

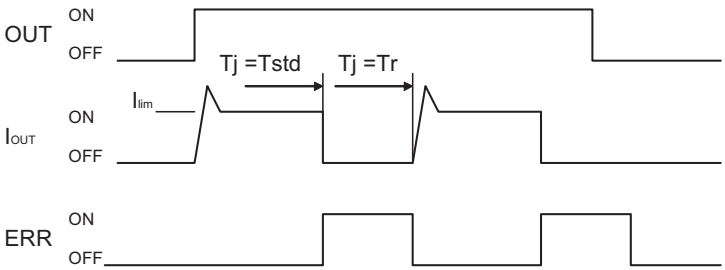

Operating Restrictions for the CJ1W-OD204/OD212/OD232/MD232

Although these Units are provided with load short-circuit protection, these are for protecting internal circuits against momentary short-circuiting in the load.
As shown in Figure 2, the load short-circuit protection is automatically released when the Tj equals to Tr. Therefore, unless the cause of short-circuit is removed, ON/OFF operations will be repeated in the output.
Leaving short-circuits for any length of time will cause internal temperature rise, deterioration of elements, discoloration of the case or PCBs, etc.
Therefore, observe the following restrictions.

● Restrictions

If a short-circuit occurs in an external load, immediately turn OFF the corresponding output and remove the cause.
An alarm output bit that corresponds to the external load output number is turned ON. There is an alarm output bit for every common.
When an alarm output bit turns ON, use a self-holding bit for the alarm in the user program and turn OFF the corresponding output.
The Alarm Output Bits are allocated in the *Basic I/O Unit Information Area* system-defined variable.
Sixteen output bits are assigned for each slot and rack in which a Unit is mounted.
_CJB_IOUnitInfo[rack_number,slot_number,serial_number_in_Unit]
For example,
when the CJ1W-OD212 is mounted in slot 0 of rack 0, *_CJB_IOUnitInfo[0,0,0]* changes to TRUE if output *Ch1Out2* changes to TRUE.
When the CJ1W-OD232 is mounted in slot 1 of rack 2, *_CJB_IOUnitInfo[2,1,1]* changes to TRUE if output *Ch2Out8* changes to TRUE.

A-5 EMC Directive Measures for Relay Outputs

The NJ-series Controllers conform to the Common Emission Standards (EN 61131-2) of the EMC Directives. However, noise generated by relay output switching may not satisfy these Standards when the Controller is incorporated into a system.
In such a case, a noise filter must be connected to the load side or other appropriate countermeasures must be provided external to the Controller. Countermeasures taken to satisfy the standards vary depending on the devices on the load side, wiring, configuration of machines, etc.
Following are examples of countermeasures for reducing the generated noise.

● Countermeasures (Refer to EN61131-2 for more details.)

- Countermeasures are not required if the frequency of load switching for the whole system with the Controller included is less than 5 times per minute.
- Countermeasures are required if the frequency of load switching for the whole system with the Controller included is 5 times or more per minute.

● Countermeasure Examples

- When switching an inductive load, connect an surge protector, diodes, etc., in parallel with the load or contact as shown below.

Circuit	Current		Characteristic	Required element
	AC	DC		
CR method 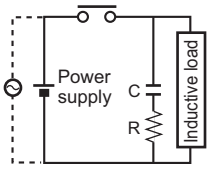 	Yes	Yes	If the load is a relay or solenoid, there is a delay in the resetting time. If the supply voltage is 24 or 48 V, insert the surge protector in parallel with the load. If the supply voltage is 100 to 200 V, insert the surge protector between the contacts.	The capacitance of the capacitor should be approx. 1 to 0.5 μF per contact current of 1 A and resistance of the resistor should be approx. 0.5 to 1 Ω per contact voltage of 1 V. These values, however, vary with the load and the characteristics of the relay. Decide these values from experiments, and take into consideration that the capacitance suppresses spark discharge when the contacts are separated and the resistance limits the current that flows into the load when the circuit is closed again. The dielectric strength of the capacitor must be 200 to 300 V. If the circuit is an AC circuit, use a capacitor with no polarity.
Diode method 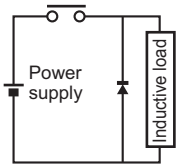 	No	Yes	The diode connected in parallel with the load changes energy accumulated by the coil into a current, which then flows into the coil so that the current will be converted into Joule heat by the resistance of the inductive load. This delay in the resetting time, caused by this method is longer than that caused by the CR method.	The reversed dielectric strength value of the diode must be at least 10 times as large as the circuit voltage value. The forward current of the diode must be the same as or larger than the load current. The reversed dielectric strength value of the diode may be two to three times larger than the supply voltage if the surge protector is applied to electronic circuits with low circuit voltages.

Circuit	Current		Characteristic	Required element
	AC	DC		
Varistor method 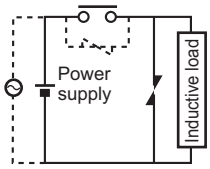 	Yes	Yes	The varistor method prevents the imposition of high voltage between the contacts by using the constant voltage characteristic of the varistor. There is a delay in the resetting time. If the supply voltage is 24 or 48 V, insert the varistor in parallel with the load. If the supply voltage is 100 to 200 V, insert the varistor between the contacts.	---

- When switching a load with a high inrush current such as an incandescent lamp, suppress the inrush current as shown below.

Countermeasure 1	Countermeasure 2
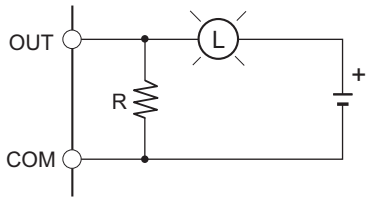 Providing a dark current of approx. one-third of the rated value through an incandescent lamp	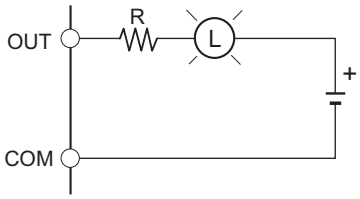 Providing a limiting resistor

A-6 System-defined Variables Related to Hardware

System-defined variables are assigned specific functions by the system.
They are registered in the global variable table, or the local variable table for each POU, in advance.
The variable names cannot be changed. Some of the variables start with an underbar and some start with "P_".

Some of the system-defined variables are read-only and some are read/write.

You read and write the variables with the user program, with communications from external devices, with the Sysmac Studio, or with an NS/NA-series PT.

The system-defined variables that are related to hardware are classified by functions as follows.

- System-defined Variables for the Overall NJ-series Controller (No Category)
  a) Clock
  b) Errors
  c) SD Memory Card
  d) Backup
  e) Power supply
  f) Version
- PLC Function Module, Category Name: _PLC
  a) Errors
- PLC Function Module, Category Name: _CJB
  a) I/O bus status
  b) I/O bus errors
  c) Auxiliary area bits for CJ-series Units

Refer to the *NJ/NX-series CPU Unit Software User's Manual (Cat. No. W501)* for details.

A-7 Version Information

Refer to *Version Information for NJ-series Controllers* in the *NJ/NX-series CPU Unit Software User's Manual (Cat. No. W501)* for the relationship between the unit versions of CPU Unit and the Sysmac Studio versions, and for the functions that are supported by each unit version.

A-7-1 Relationship between Hardware Revisions of CPU Units and Sysmac Studio Versions

The following table shows how the hardware revisions of the NJ-series CPU Units correspond to Sysmac Studio versions. Use the corresponding version of Sysmac Studio or higher if you execute the Simulator in Execution Time Estimation Mode. You cannot select the relevant hardware revision if you use a lower version of the Sysmac Studio.

Model number	Hardware revision of CPU Unit	Corresponding version of Sysmac Studio
NJ501-□□□□	A	Ver.1.14
	B	Ver.1.24
	C	Ver.1.46
	D	Ver.1.47
NJ301-□□□□	A	Ver.1.24
	C	Ver.1.46
	D	Ver.1.47
NJ101-□□□□	A	Ver.1.24
	C	Ver.1.46
	D	Ver.1.47

A-7-2 Performance Improvements for Unit Version Upgrades

This section introduces the functions for which performance was improved for each unit version of the CPU Unit and for each Sysmac Studio version.

Function				Performance value	Unit version	Sysmac Studio version
Programming	Program capacity	Quantities	Number of POU instances (NJ501-□□□□)	9,000	---	1.06 or higher
				6,000	---	1.05 or lower
			Number of POU instances (NJ301-□□□□)	3,000	1.04 or later	1.05 or higher
				1,500		1.04 or lower
				2,400	1.03 or earlier	1.05 or higher
				1,500		1.04 or lower
	Memory capacity for variables	Variables with a Retain attribute	Number of variables*1 (NJ301-□□□□)	5,000	1.04 or later	1.05 or higher
				2,500		1.04 or lower
				2,500	1.03 or earlier	---
		Variables without a Retain attribute	Number of variables (NJ501-□□□□)	180,000	1.20 or later	1.26 or higher
				90,000	Other than the above combination	
			Number of variables (NJ301-□□□□)	90,000	1.20 or later	1.26 or higher
				22,500	Other than the above combination	
Motion Control	Number of controlled axes	Maximum number of controlled axes*2*3*4 (NJ301-□□□□)		15 axes	1.06 or later	1.07 or higher
				8 axes (NJ301-1200) 4 axes (NJ301-1100)	Other than the above combination	
		Maximum number of axes for single-axis control*4*5 (NJ301-□□□□)		15 axes	1.06 or later	1.07 or higher
				8 axes (NJ301-1200) 4 axes (NJ301-1100)	Other than the above combination	
Built-in EtherNet/IP port	CIP service: Tag data links (cyclic communications)	Packet interval		Can be set for each connection. 1 to 10,000 ms in 1-ms increments	1.03 or higher	---
				Can be set for each connection. 10 to 10,000 ms in 1-ms increments	1.02 or lower	
		Permissible communications band		3,000 pps*6 (including heartbeat)	1.03 or higher	---
				1,000 pps (including heartbeat)	1.02 or lower	
	Number of TCP sockets			30	1.03 or higher	---
				16	1.02 or lower	
Built-in EtherCAT port	Communications cycle*7 (NJ301-□□□□)			500, 1,000, 2,000, or 4,000 μs	1.03 or higher	---
				1,000, 2,000, or 4,000 μs	1.02 or lower	

*1. The performance improvement applies only to an NJ301-□□□□ CPU Unit. The maximum number of variables with a Retain attributes for the NJ501-□□□□ is 10,000.

*2. This is the total for all axis types.
*3. The performance improvement applies only to an NJ301-□□□□ CPU Unit. The maximum numbers of controlled axes for the NJ501-□□□□ are as follows:
NJ501-□5□□: 64 axes, NJ501-□4□□: 32 axes, and NJ501-□3□□: 16 axes
*4. There is no change in the maximum number of used real axes.
*5. The performance improvement applies only to an NJ301-□□□□ CPU Unit. The maximum numbers of axes for single-axis control for the NJ501-□□□□ are as follows:
NJ501-□5□□: 64 axes, NJ501-□4□□: 32 axes, and NJ501-□3□□: 16 axes
*6. Here, pps means “packets per second” and indicates the number of packets that can be processed in one second.
*7. The performance improvement applies only to an NJ301-□□□□ CPU Unit. You can use 500, 1,000, 2,000 or 4,000 μs communications cycle with an NJ501-□□□□ CPU Unit, and 1,000, 2,000 or 4,000 μs communications cycle with an NJ101-□□□□ CPU Unit.

I

Index

I

Index

B

B7A communications specifications..... 3-28
B7A interface ports..... 3-27
B7A Interface Units.....3-27
Basic I/O Unit Information.....
..... 3-32, A-50, A-52, A-53, A-55, A-122, A-125
basic system configuration..... 2-2
basic system configurations..... 1-4
battery connector.....3-3
battery replacement procedure.....6-7
battery service life and replacement period.....6-5
Battery Set..... 2-8, 6-3, 6-6
built-in EtherCAT port..... 3-3
built-in EtherNet/IP port..... 3-3
BUSY indicator..... 3-6

C

_Card1Deteriorated (SD Memory Card Life Warning Flag)....
.....3-12
CJ-series Basic I/O Units..... 2-12, 3-22
list.....2-13
specifications.....A-3
wiring models with connectors.....4-35
wiring models with terminal blocks.....4-34
CJ-series Basic I/O Units list..... 2-13
CJ-series Configuration Units.....2-12
CJ-series CPU Bus Units..... 2-12
list.....2-20
CJ-series I/O Control Unit..... 2-8, 3-33
CJ-series I/O Interface Unit..... 2-11, 3-33
CJ-series Special I/O Units.....2-12
list.....2-16
CJ-series Unit Configuration..... 1-4, 2-2, 2-5
_CJB_IOUnitInfo (Basic I/O Unit Information).....
..... 3-32, A-50, A-52, A-53, A-55, A-122, A-125
Connecting Cables
Connector-Terminal Block Conversion Units.....4-40, A-74
I/O Relay Terminals..... A-75
USB port..... 2-8
Connecting to Connector-Terminal Block Conversion Units...
..... 4-40, A-74
Connections to Connector-Terminal Block Conversion Units.
.....A-76
connector types.....3-25, 4-35
contact current vs. service life characteristic.....A-71
contact protection circuit..... A-71
CPU Bus Units list..... 2-20
CPU Rack.....2-5
CPU Units.....3-2
CS/CJ-series I/O Connecting Cables.....2-12, 4-21
current consumptions..... 2-6, 2-11, 2-13

D

Daisy chain.....4-60, 4-62
dimensions.....4-24, A-114
DIN Track..... 2-8, 4-18, 4-20
DIP switches.....3-3

E

Earthing Methods..... 4-60
emergency stop circuit example.....4-8
EN 61131-2..... A-126
End Cover.....2-8, 2-11
Equipotential bonding system.....4-60
ERROR indicator.....3-6
EtherCAT network configuration.....1-4, 2-2, 2-4
event logs..... 4-6
events.....5-2
Expansion Racks.....2-10

F

fail-safe circuits.....4-7
Fujitsu / OTAX connectors.....3-25, 3-26, 4-36
Functional Grounding..... 4-32

G

GR..... 4-32
GR terminal..... 3-17
grounding..... 4-32, 4-60

I

I/O Connecting Cables..... 2-12, 4-21
I/O Relay Terminals connecting..... 4-40, A-74
I/O Relay Terminals connection patterns..... A-75
I/O Relay Terminals connections.....A-83
ID information indication.....3-3, 3-10
Incorrect Power Supply Unit Connected error.....3-6
indicators..... 3-3
inductive loads..... A-71
input devices.....4-42
inrush current.....3-14
installation cabinets or control panels.....4-10
installation dimensions..... 4-26
installation height.....4-27
installation method in control panels..... 4-13
interlock circuits.....4-8
Interrupt Input Unit..... 2-13, A-26

L

LG.....3-16, 4-32
line disconnection detection.....A-121
LINK/ACT indicator.....3-8, 3-9
load short-circuit protection.....A-121
lot numbers.....3-10

M

MAC addresses..... 3-10
MIL connectors.....3-25, 3-26, 4-38

N

NET ERR indicator..... 3-8, 3-9
NET RUN indicator.....3-8, 3-9
network configuration..... 1-6, 2-22

O

operation before operation-ready status.....4-2
operation indicators..... 3-3

P

periodic inspection.....6-2
Peripheral USB port.....3-3
power consumption calculating..... 3-19
power OFF detection time..... 4-4
power OFF operation.....4-3
power supply
  wiring.....4-28
Power Supply Units..... 2-7, 2-11, 3-14
Power Supply Units selecting..... 3-17
power supply wiring..... 4-8
precautions output wiring.....4-46
Protective Grounding.....4-32
PWR indicator.....3-16

Q

Quick-response Input Unit..... 2-13, 3-26, A-28

R

RUN indicator..... 3-6
RUN output..... 3-17, 4-29, 4-31

S

SD BUSY indicator..... 3-7
SD Memory Card connector..... 3-3
SD Memory Card Life Warning Flag.....3-12
SD Memory Card Power Supply Switch..... 3-3
SD Memory Cards..... 2-7, 3-11
SD PWR indicator.....3-7
service life expectancy..... A-71
sliders..... 3-3, 4-16
slots..... 2-5
Special I/O Units list..... 2-16
specifications..... 1-8
Star earthing.....4-60, 4-61
starting.....3-6
Support Software.....1-5, 1-6
Sysmac Studio.....3-34

T

transmission delay switch.....3-31

U

Unit connector..... 3-3
Unit current consumption calculating.....3-17

W

weights..... 2-6, 2-11, 2-13
Wiring B7A Interface Units..... 4-47
wiring ducts.....4-13

I

OMRON Corporation **Industrial Automation Company**

Kyoto, JAPAN **Contact : www.ia.omron.com**

Regional Headquarters

OMRON EUROPE B.V.
Wegalaan 67-69, 2132 JD Hoofddorp
The Netherlands
Tel: (31) 2356-81-300 Fax: (31) 2356-81-388

OMRON ELECTRONICS LLC
2895 Greenspoint Parkway, Suite 200
Hoffman Estates, IL 60169 U.S.A.
Tel: (1) 847-843-7900 Fax: (1) 847-843-7787

OMRON ASIA PACIFIC PTE. LTD.
438B Alexandra Road, #08-01/02 Alexandra
Technopark, Singapore 119968
Tel: (65) 6835-3011 Fax: (65) 6835-3011

OMRON (CHINA) CO., LTD.
Room 2211, Bank of China Tower,
200 Yin Cheng Zhong Road,
PuDong New Area, Shanghai, 200120, China
Tel: (86) 21-6023-0333 Fax: (86) 21-5037-2388

Authorized Distributor:

©OMRON Corporation 2011-2026 All Rights Reserved.
In the interest of product improvement,
specifications are subject to change without notice.

Cat. No. W500-E1-38 1026